THIS DRAWING IS UNPUBLISHED. RELEASED FOR PUBLICATION MARCH ,2006.
© COPYRIGHT 2006 BY TYCO ELECTRONICS CORPORATION. ALL RIGHTS RESERVED.

LOC	DIST
E	B

REVISIONS

P	LTR	DESCRIPTION	DATE	DWN	APVD
	B	ECR-07-012186	21/05/07	AM	FWK

NOTES:

1. ELECTRICAL DATA: CONTACT RESISTANCE: 10 mOhm MAX
   INSULATION RESISTANCE: 100 MOhm MIN at 500VDC
   CURRENT RATING: 5 AMPS
   BREAKDOWN VOLTAGE: 500 VAC MIN PER MINUTE
2. ENVIRONMENTAL: OPERATING TEMPERATURE: −25°C TO +90°C
   SEALING REQUIREMENTS: IP67
3. PROD SPEC: 108−3641
4. PACKAGING: 107−3334
5. FOR TECHNICAL DATA REFER TO YOUR LOCAL TYCO ELECTRONICS SALES OFFICE
6. ALL DIMENSIONS ARE NOMINAL FOR REFERENCE ONLY UNLESS OTHERWISE STATED

ITEM	DESCRIPTION	MATERIAL	FINISH/COLOUR	QTY
1	SCREW NUT	ZINC DIE CAST	2.5µm NICKEL PLATED	1
2	CONNECTOR BODY	GF NYLON	BLACK	1
3	PIN CONTACT	BRASS	0.15µm GOLD OVER NICKEL	5
4	5 CORE CABLE (CORES 0.34mm²)	PU JACKET HAL FREE	BLACK	1
5	SHIELD	BRASS	–	1
6	SHIELDING FOIL	COPPER	–	1
7	ADHESIVE	–	–	1

PIN ASSIGNMENTS
FRONT VIEW

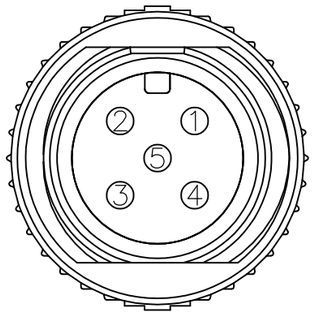

SHIELD	DRAIN WIRE
5	GREEN
4	BLACK
3	BLUE
2	WHITE
1	BROWN
PIN	WIRE COLOUR

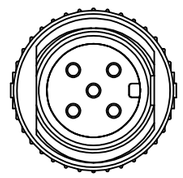

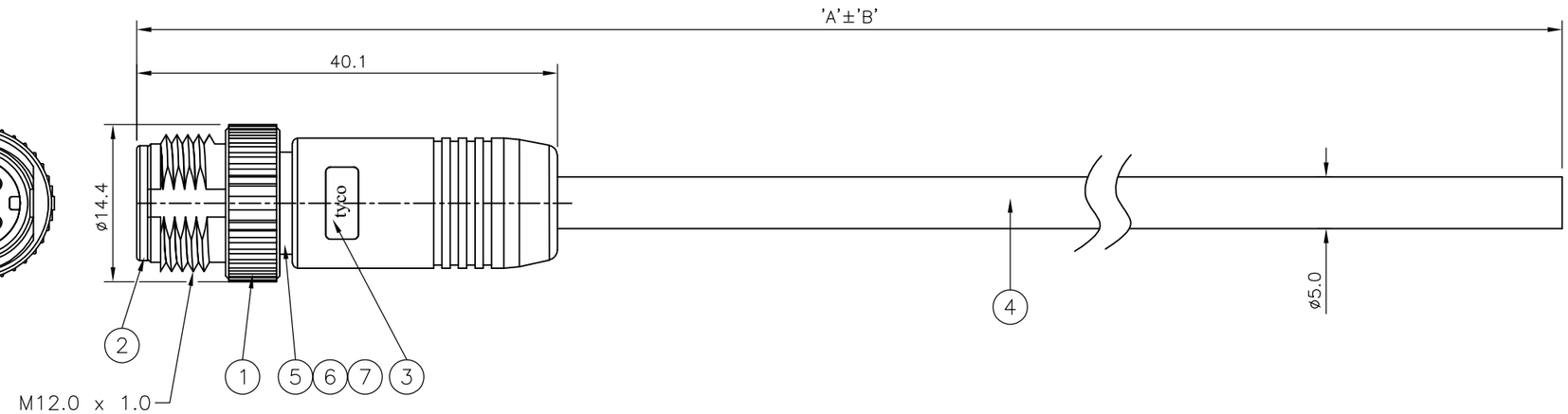

DIM A	TOL 'B'	DESCRIPTION	PART NUMBER
10000	500 mm	M12 STRAIGHT MALE CONNECTOR 10.0m CABLE	1838370−5
7000	350 mm	M12 STRAIGHT MALE CONNECTOR 7.0m CABLE	1838370−4
5000	250 mm	M12 STRAIGHT MALE CONNECTOR 5.0m CABLE	1838370−3
3000	150 mm	M12 STRAIGHT MALE CONNECTOR 3.0m CABLE	1838370−2
2000	100 mm	M12 STRAIGHT MALE CONNECTOR 2.0m CABLE	1838370−1

THIS DRAWING IS A CONTROLLED DOCUMENT.

DIMENSIONS: mm

TOLERANCES UNLESS OTHERWISE SPECIFIED:
0 PLC ± –
1 PLC ± –
2 PLC ± –
3 PLC ± –
4 PLC ± –
ANGLES ± –

MATERIAL –
FINISH –

DWN MANJUNATH.T.N 03APR06
CHK F.WHEELER−KING 07AUG06
APVD F.WHEELER−KING 07AUG06
PRODUCT SPEC –
APPLICATION SPEC –
WEIGHT –

tyco Electronics
Tyco Electronics Corporation
Bideford, UK, EX39 4HE

NAME
M12 SHIELDED, STRAIGHT MALE CONNECTOR
WITHOUT STRAIN RELIEF 5 POSITION, PU CABLE

SIZE	CAGE CODE	DRAWING NO	RESTRICTED TO
A3	00779	C-1838370	–

CUSTOMER DRAWING

SCALE	SHEET	REV
NTS	1 OF 1	B

AMP 1470−19 REV 31MAR2000