THIS DRAWING IS UNPUBLISHED. RELEASED FOR PUBLICATION - ,- .
© COPYRIGHT - BY TYCO ELECTRONICS CORPORATION. ALL INTERNATIONAL RIGHTS RESERVED.

LOC	DIST
AD	00

REVISIONS

P	LTR	DESCRIPTION	DATE	DWN	APVD
	Y2	REVISED PER ECO-09-008178	02APR09	HMR	JO

1 RECOMMENDED HOLE SIZE .078±.002 DIA

2 THIS POST IS NOT COMPATIBLE WITH TERMI-POINT APPLICATIONS

3 .000030 GOLD OVER .000050 NICKEL

4 .000100-.000200 BRIGHT TIN-LEAD OVER .000030 NICKEL

5 .000015 GOLD OVER .000050 NICKEL

6 POINT OF MEASUREMENT FOR PLATING THICKNESS

7 .000030 GOLD IN AREA E, .000100-.000200 BRIGHT TIN-LEAD ON SOLDER TAIL, ALL OVER .000050 NICKEL

8 .000015 GOLD IN AREA E, .000100-.000200 BRIGHT TIN-LEAD ON SOLDER TAIL, ALL OVER .000050 NICKEL

9 OBSOLETED PART NUMBER.

10 INACTIVE PART NUMBER.

11 .000100-.000200 MATTE TIN OVER .000030 NICKEL

12 PRELIMINARY PART - NOT RELEASED FOR PRODUCTION.

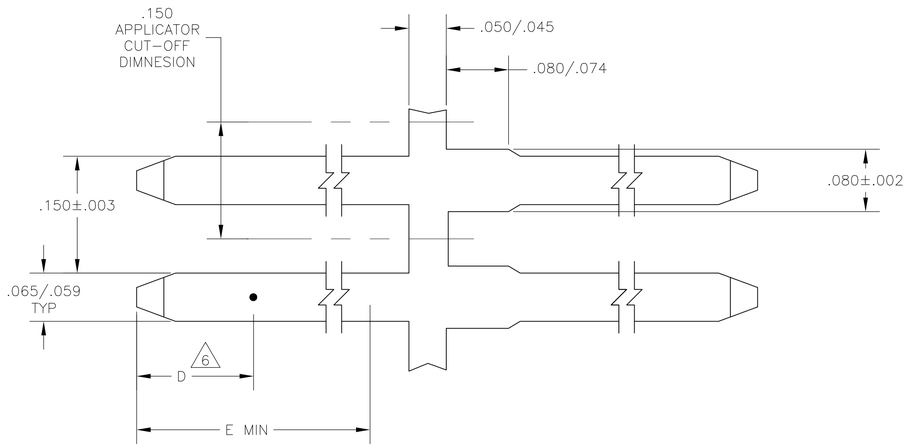

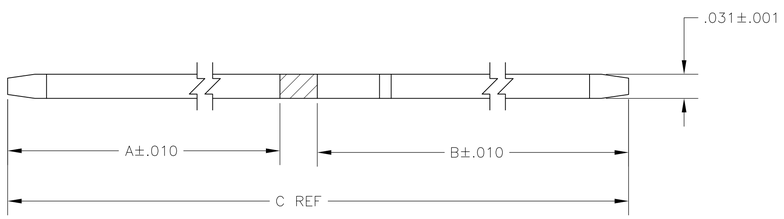

FINISH	E	D	C	B	A	LOOSE PIECE PART NUMBER	STRIP PART NUMBER
11	.200	.200	.875	.092	.735	-	7-86147-0 12
8	.690	.200	.998	.150	.800	5-86182-1 9	6-86147-9 9
8	.640	.200	1.175	.375	.750	5-86182-0 9	6-86147-8 9
8	.625	.200	.875	.092	.735	4-86182-9 9	6-86147-7 9
8	.560	.200	.843	.125	.670	4-86182-8 9	6-86147-6 9
8	.455	.200	.800	.187	.565	4-86182-7 9	6-86147-5 9
8	.250	.200	.595	.187	.360	4-86182-6 9	6-86147-4 9
8	.240	.200	.798	.400	.350	4-86182-5 9	6-86147-3 9
7	.890	.200	1.198	.150	1.000	4-86182-4 9	6-86147-2 9
7	.690	.200	.998	.150	.800	4-86182-3 9	6-86147-1 9
7	.560	.200	.843	.125	.670	4-86182-2 9	6-86147-0 9
7	.490	.200	1.273	.625	.600	4-86182-1 9	5-86147-9 9
7	.460	.200	.748	.130	.570	4-86182-0 9	5-86147-8 9
7	.455	.200	1.143	.530	.565	3-86182-9 9	5-86147-7 9
7	.455	.200	.800	.187	.565	3-86182-8 9	5-86147-6 9
7	.370	.200	.715	.187	.480	3-86182-7 9	5-86147-5 9
7	.290	.200	.573	.125	.400	3-86182-6 9	5-86147-4 9
7	.270	.200	.748	.320	.380	3-86182-5 9	5-86147-3 9
7	.250	.200	.595	.187	.360	3-86182-4 9	5-86147-2 9
7	.240	.200	.798	.400	.350	3-86182-3 9	5-86147-1 9
4	—	—	.828	.530	.250	3-86182-2 9	4-86147-9 9
5	—	.200	.798	.400	.350	3-86182-1 9	4-86147-8 9
5	—	.200	.875	.092	.735	2-86182-8 9	4-86147-6 9
5	—	.200	.595	.187	.360	3-86182-0 9	4-86147-5
3	—	.200	.573	.125	.400	2-86182-9 9	4-86147-2
4	—	—	1.198	.150	1.000	2-86182-7 9	4-86147-1
4	—	—	.748	.130	.570	2-86182-6 9	3-86147-9 9
4	—	—	.573	.125	.400	2-86182-5	3-86147-7
3	—	.200	.798	.400	.350	2-86182-4 9	3-86147-6 9
4	—	—	.843	.125	.670	2-86182-3 9	2-86147-3 9
4	—	—	.715	.187	.480	2-86182-2	2-86147-2
5	—	.200	1.175	.375	.750	2-86182-1 9	2-86147-1 9
3	—	.200	.748	.130	.570	2-86182-0 9	2-86147-0 9
4	—	—	.798	.400	.350	1-86182-9 9	1-86147-9 9
3	—	.200	.715	.187	.480	1-86182-8	1-86147-8
5	—	.200	.843	.125	.670	1-86182-7 9	1-86147-7 9
3	—	.200	1.198	.150	1.000	1-86182-6 9	1-86147-6 9
3	—	.200	.748	.320	.380	1-86182-5	1-86147-5
5	—	.200	.800	.187	.565	1-86182-4 9	1-86147-4 9
5	—	.200	.998	.150	.800	1-86182-3 9	1-86147-3 9
3	—	.200	.998	.150	.800	1-86182-2	1-86147-2
3	—	.200	.843	.125	.670	1-86182-1 9	1-86147-1
4	—	—	.998	.150	.800	1-86182-0	1-86147-0
4	—	—	.748	.320	.380	86182-9	86147-9
3	—	.200	.800	.187	.565	86182-8	86147-8
3	—	.200	.595	.187	.360	86182-7	86147-7
3	—	.200	1.143	.530	.565	86182-6 9	86147-6 9
3	—	.200	1.273	.625	.600	86182-5 9	86147-5 9
4	—	—	1.273	.625	.600	86182-4 9	86147-4 9
4	—	—	1.143	.530	.565	86182-3 9	86147-3 9
4	—	—	.595	.187	.360	86182-2	86147-2
4	—	—	.800	.187	.565	86182-1	86147-1

THIS DRAWING IS A CONTROLLED DOCUMENT.

DIMENSIONS: INCHES

TOLERANCES UNLESS OTHERWISE SPECIFIED:
0 PLC ± -
1 PLC ± -
2 PLC ± -
3 PLC ± -
4 PLC ± -
ANGLES ± -

MATERIAL: BRASS

FINISH: SEE TABLE

DWN R BROWN 01MAY2006
CHK N EPPLEY 01MAY2006
APVD N EPPLEY 01MAY2006

PRODUCT SPEC —

APPLICATION SPEC —

WEIGHT —

Tyco Electronics
Tyco Electronics Corporation
Harrisburg, PA 17105-3608

NAME: CONTACT, MOD I, MALE .031 X .062

SIZE A1 | CAGE CODE 00779 | DRAWING NO C-86147 | RESTRICTED TO —

CUSTOMER DRAWING | SCALE 10:1 | SHEET 1 OF 1 | REV Y2