THIS DRAWING IS UNPUBLISHED. RELEASED FOR PUBLICATION – ,N/A .
© COPYRIGHT N/A By – ALL RIGHTS RESERVED.

LOC	DIST
—	—

REVISIONS

P	LTR	DESCRIPTION	DATE	DWN	APVD
	F	REV PER ECO 12-014181	8-3-12	CT	RG

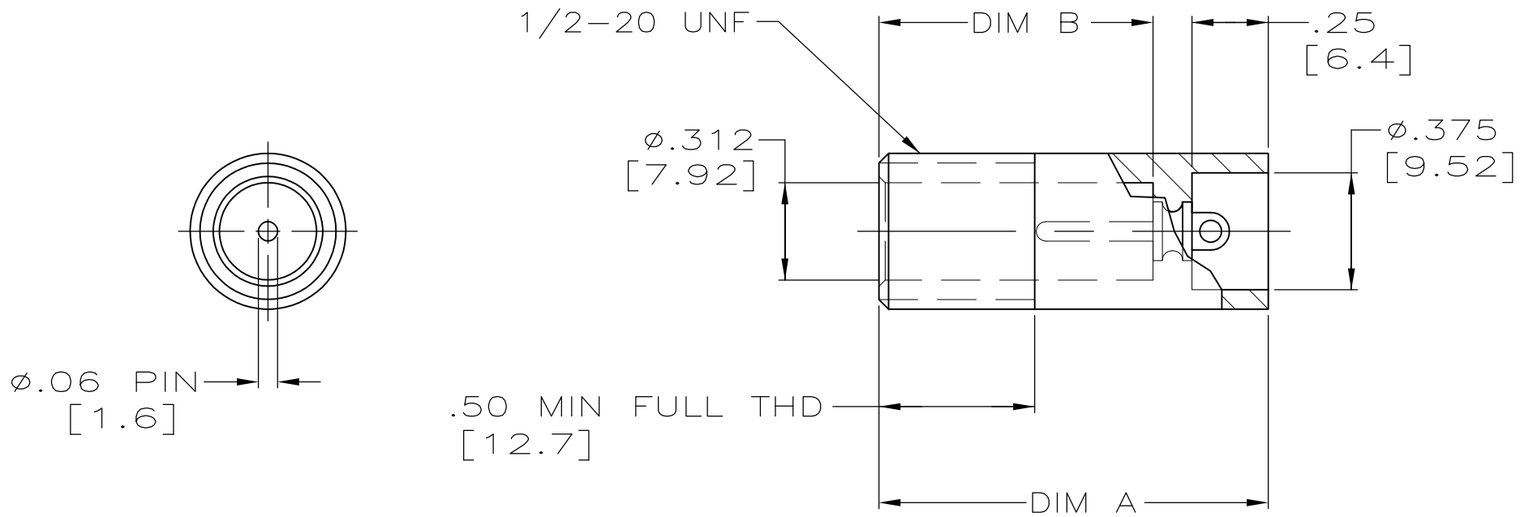

	DIM B	DIM A	CONTACT PLATING	PART NO.
	.88 [22.4]	1.25 [31.8]	TIN PLATED	5-849610-3
	.88 [22.4]	1.25 [31.8]	GOLD PLATED	849610-4
	.88 [22.4]	1.25 [31.8]	TIN-LEAD PLATED	849610-3
OBSOLETE	1.12 [28.4]	1.50 [38.1]	GOLD PLATED	849610-2
OBSOLETE	1.12 [28.4]	1.50 [38.1]	TIN-LEAD PLATED	849610-1

THIS DRAWING IS A CONTROLLED DOCUMENT.

DIMENSIONS: INCHES

TOLERANCES UNLESS OTHERWISE SPECIFIED:

0 PLC	± –
1 PLC	± –
2 PLC	± .02[0.5]
3 PLC	± .005[0.13]
4 PLC	± –
ANGLES	± –

MATERIAL: MOLDED GLASS EPOXY COLOR: BLACK

FINISH: –

DWN C.C.THOMAS 05-MAY-97
CHK S.GLATFELTER 16-JUL-97
APVD S.GLATFELTER 16-JUL-97
PRODUCT SPEC —
APPLICATION SPEC —
WEIGHT —

CUSTOMER DRAWING

TE Connectivity

NAME: RECEPTACLE LGH-1 WITH RECESSED TERMINAL

SIZE	CAGE CODE	DRAWING NO	RESTRICTED TO
A3	00779	C-849610	—

SCALE 2:1 SHEET 1 OF 1 REV F

1470-19 (3/11)