THIS DRAWING IS UNPUBLISHED. RELEASED FOR PUBLICATION .19 .
© COPYRIGHT 19 BY AMP INCORPORATED. ALL RIGHTS RESERVED.

LOC	DIST
CE	00

REVISIONS

P	LTR	DESCRIPTION	DATE	DWN	APVD
	A	REV PER 0B60-0031-01	04JUN2001	BB	DK
	B	REVISE PER 0A00-0138-01	13AUG2001	BB	DK
	C	REVISE PER ECR-06-014872	20JUN2006	BB	DK

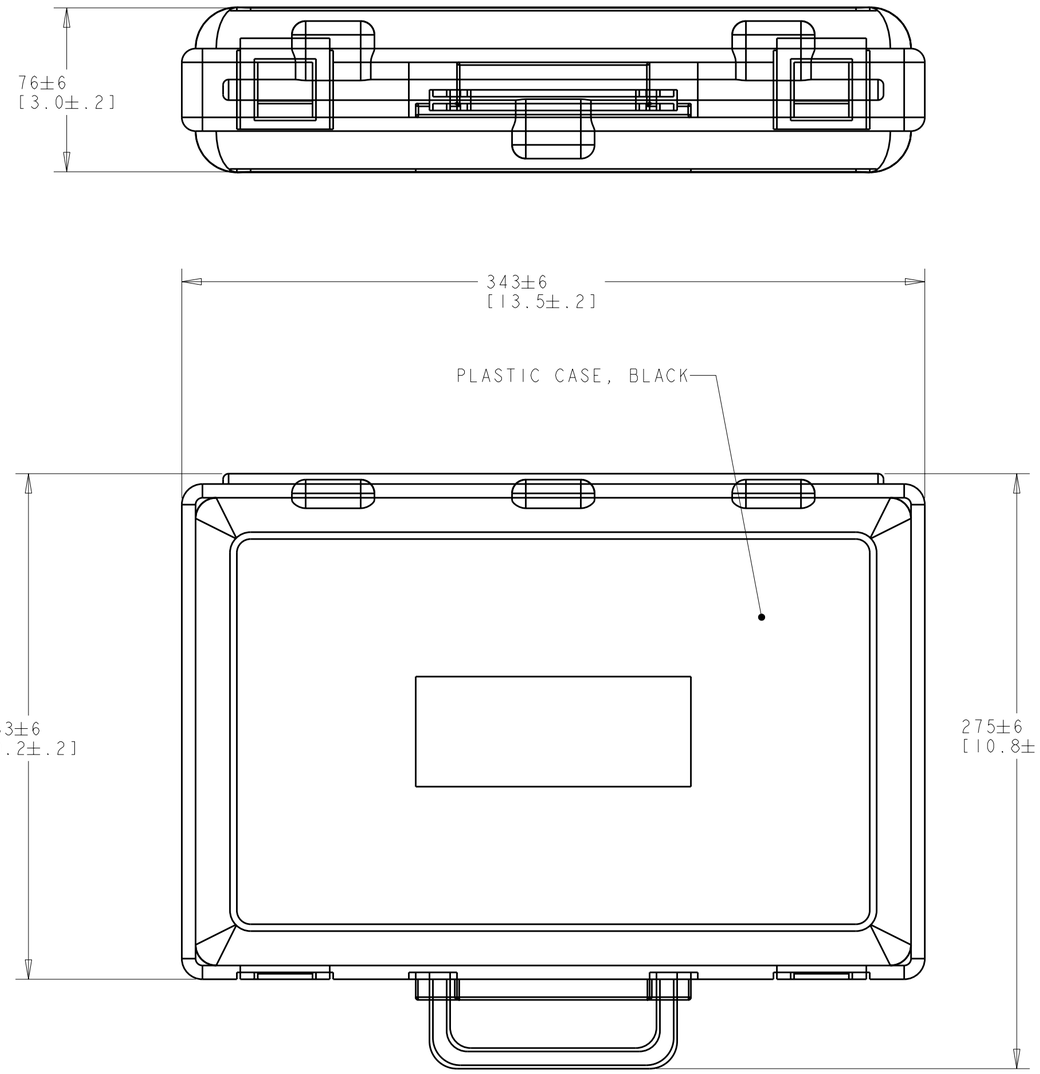

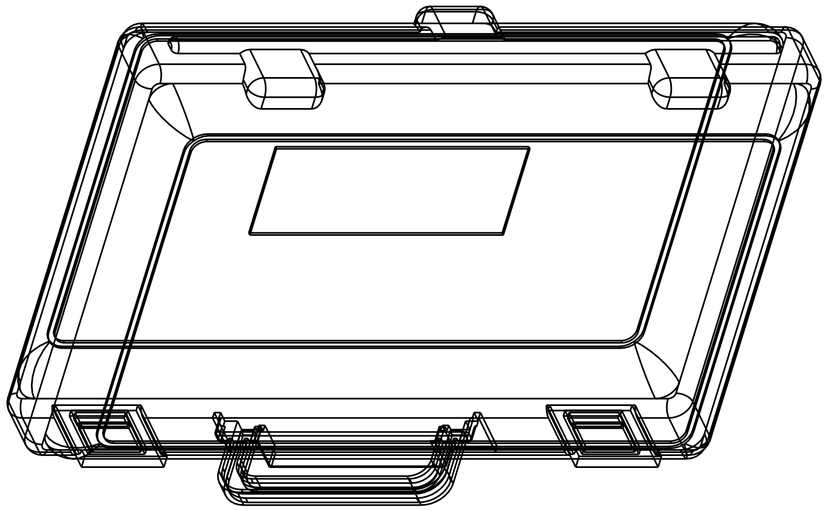

1. 1278861-1 INCLUDES MT-RJ ADAPTER (1),
   MT-RJ TO SC SIMPLEX CABLE ASSEMBLY (2),
   MT-RJ(PINS) TO SC SIMPLEX CABLE ASSEMBLY (1),
   MT-RJ TO MT-RJ CABLE ASSEMBLY (1),
   AND 50/125 MANDREL (2).

2. 1278861-2 INCLUDES MT-RJ ADAPTER (1),
   MT-RJ TO ST SIMPLEX CABLE ASSEMBLY (2),
   MT-RJ(PINS) TO ST SIMPLEX CABLE ASSEMBLY (1),
   MT-RJ TO MT-RJ CABLE ASSEMBLY (1),
   AND 50/125 MANDREL (2).

3. 1278861-3 INCLUDES
   MT-RJ TO MT-RJ CABLE ASSEMBLY (2),
   AND 50/125 MANDREL (2).

4. 1278861-4 INCLUDES MT-RJ ADAPTER (1),
   MT-RJ (SECURE HOUSING) TO SC SIMPLEX CABLE ASSEMBLY (2),
   MT-RJ (PINS) TO SC SIMPLEX CABLE ASSEMBLY (1),
   MT-RJ (SECURE HOUSING) TO MT-RJ CABLE ASSEMBLY (1),
   AND 50/125 MANDREL (2).

5. 1278861-5 INCLUDES MT-RJ ADAPTER (1),
   MT-RJ (SECURE HOUSING) TO ST SIMPLEX CABLE ASSEMBLY (2),
   MT-RJ (PINS) TO ST SIMPLEX CABLE ASSEMBLY (1),
   MT-RJ (SECURE HOUSING) TO MT-RJ CABLE ASSEMBLY (1),
   50/125 MANDREL (2).

6. 1278861-6 INCLUDES
   MT-RJ (SECURE HOUSING) TO MT-RJ CABLE ASSEMBLY (2),
   AND 50/125 MANDREL (2).

TEST EQUIPTMENT CONNECTION	PART NUMBER
MT-RJ	1278861-6
ST SIMPLEX	1278861-5
SC SIMPLEX	1278861-4
MT-RJ	1278861-3
ST SIMPLEX	1278861-2
SC SIMPLEX	1278861-1

THIS DRAWING IS A CONTROLLED DOCUMENT FOR AMP INCORPORATED. IT IS SUBJECT TO CHANGE AND THE CONTROLLING ENGINEERING ORGANIZATION SHOULD BE CONTACTED FOR THE LATEST REVISION.

DIMENSIONS: mm [INCHES]

TOLERANCES UNLESS OTHERWISE SPECIFIED:
0 PLC ±-
1 PLC ±-
2 PLC ±-
3 PLC ±-
4 PLC ±-
ANGLES ±-

MATERIAL -
FINISH -

DWN D.PULEO 22SEP99
CHK R.GALLAGHER 22SEP99
APVD R.EDWARDS 22SEP99
PRODUCT SPEC -
APPLICATION SPEC -
WEIGHT -

AMP
AMP Incorporated
Harrisburg, PA 17105-3608

NAME MT-RJ TEST CABLE KIT, 50/125um
-

SIZE	CAGE CODE	DRAWING NO
A2	00779	C-1278861

CUSTOMER DRAWING

SCALE	SHEET	OF	REV
NTS	1	1	C