Feb.1.2018 Copyright 2018 HIROSE ELECTRIC CO., LTD. All Rights Reserved.

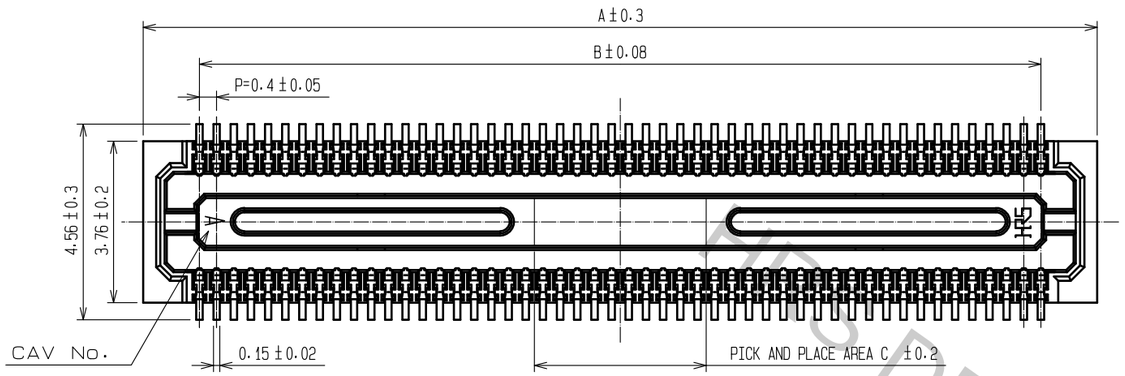

RECOMMENDED PATTERN

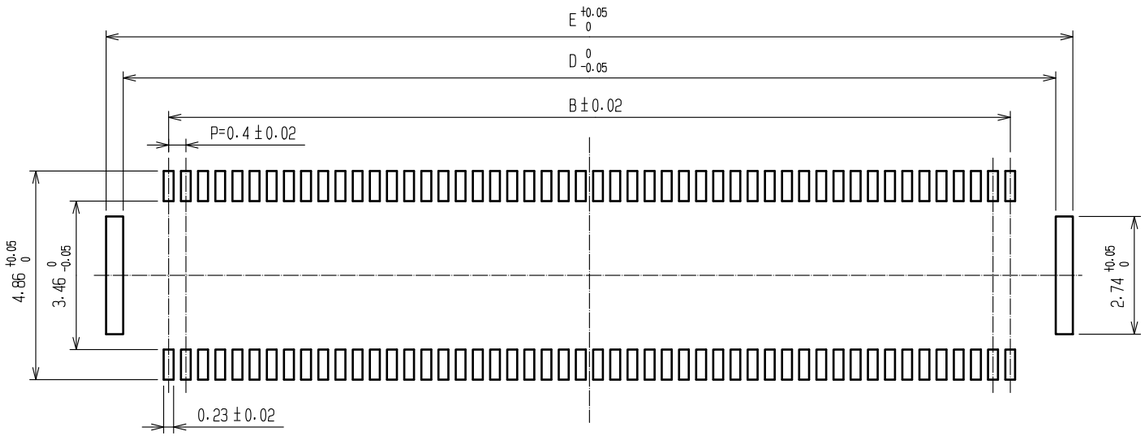

RECOMMENDED SOLDER PASTE:THICKNESS 120μm

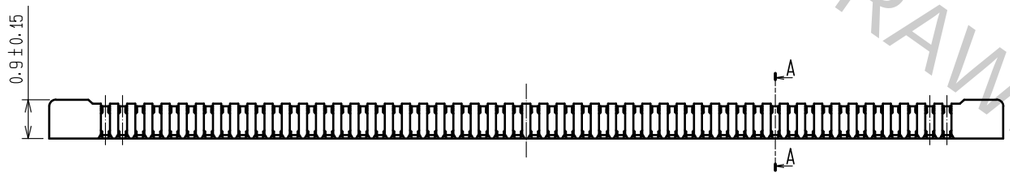

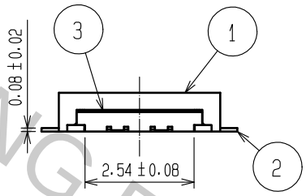

NOTE 1. ALL LEADS CO-PLANARITY SHALL BE 0.1 MAX.
2. PER REEL : 5000 CONNECTORS.
3. AT THE BEGINNING OF THE REEL, 100 MM AT MIN SHALL BE EMPTY POCKETS.
AT THE END OF THE REEL, 160 MM AI MIN SHALL BE EMPTY.
4. NO CAVITY ON THE CONNECTORS LESS THAN 24 POS.
5. CONTACT PLATING SPECIFICATIONS.
CONTACT AREA : GOLD 0.05μm MIN.
SMT LEAD : GOLD 0.02μm MIN.
UNDERPLATING : NICKEL 1μm MIN.
(SURFACE : SEALING)
6. METAL HOLD DOWN PLATING SPECIFICATIONS.
MOUNTING AREA: TIN 1μm MIN.
UNDERPLATING : NICKEL 1μm MIN.

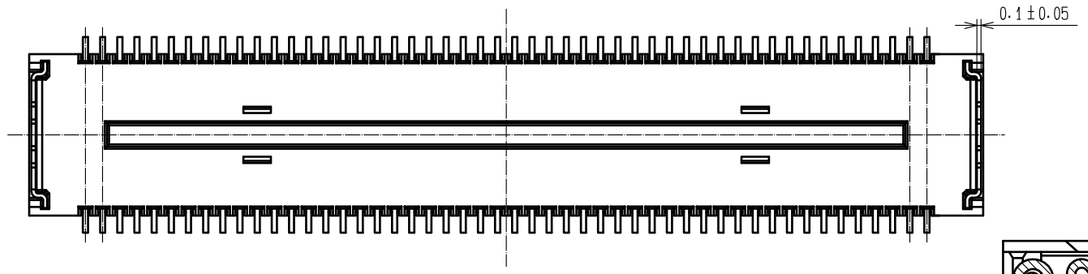

A-A(20:1)

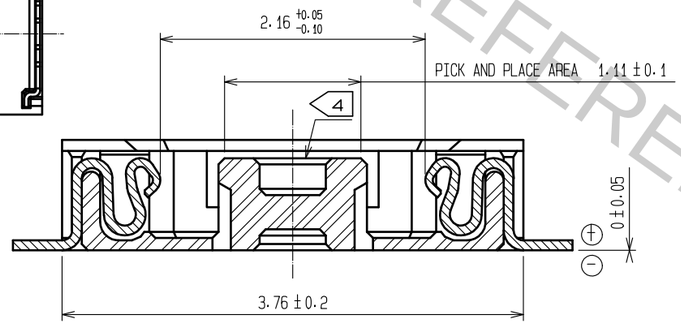

2 PART NO.	CODE NO.	A	B	C	D	E
DF30FB- 80DS-0.4V(81)	CL684-1107-2-81	18.22	15.6	3.2	17.72	18.52
DF30FB- 70DS-0.4V(81)	CL684-1106-0-81	16.22	13.6	2.8	15.72	16.52
DF30FB- 60DS-0.4V(81)	CL684-1105-7-81	14.22	11.6	2.4	13.72	14.52
DF30FB- 50DS-0.4V(81)	CL684-1104-4-81	12.22	9.6	2	11.72	12.52
DF30FB- 44DS-0.4V(81)	CL684-1295-4-81	11.02	8.4	1.76	10.52	11.32
DF30FB- 40DS-0.4V(81)	CL684-1103-1-81	10.22	7.6	1.6	9.72	10.52
DF30FB- 34DS-0.4V(81)	CL684-1102-9-81	9.02	6.4	1.36	8.52	9.32
DF30FB- 30DS-0.4V(81)	CL684-1101-6-81	8.22	5.6	1.2	7.72	8.52
DF30FB- 24DS-0.4V(81)	CL684-1100-3-81	7.02	4.4	1.2	6.52	7.32
DF30FB- 22DS-0.4V(81)	CL684-1099-6-81	6.62	4.0	1.2	6.12	6.92
DF30FB- 20DS-0.4V(81)	CL684-1098-3-81	6.22	3.6	1.2	5.72	6.52

NO.	MATERIAL	FINISH , REMARKS	NO.	MATERIAL	FINISH , REMARKS
3	PHOSPHOR BRONZE	6	6	PS	PLASTIC REEL(BLACK)
2	PHOSPHOR BRONZE	5	5	POLYESTER	CLEAR(COVER TAPE)
1	LCP	UL94V-0, BLACK	4	PS	CLEAR(EMBOSSED CARRIER TAPE)

UNITS	SCALE		COUNT	DESCRIPTION OF REVISIONS	DESIGNED	CHECKED	DATE
mm	FREE	2	2	DIS-H-00002752	SH. HOSODA	TS. MIYAZAKI	17.10.10

HIROSE ELECTRIC CO., LTD.

APPROVED	: KJ. KATAYOSE	05.01.05
CHECKED	: KI. AKIYAMA	05.01.05
DESIGNED	: TH. ARAI	05.01.05
DRAWN	: TH. ARAI	05.01.05

DRAWING NO. EDC3-303547-02
PART NO. DF30FB-*DS-0.4V(81)
CODE NO. CL684- 2 1/2

PCS DRAWING FOR REFERENCE

Feb.1.2018 Copyright 2018 HIROSE ELECTRIC CO., LTD. All Rights Reserved.

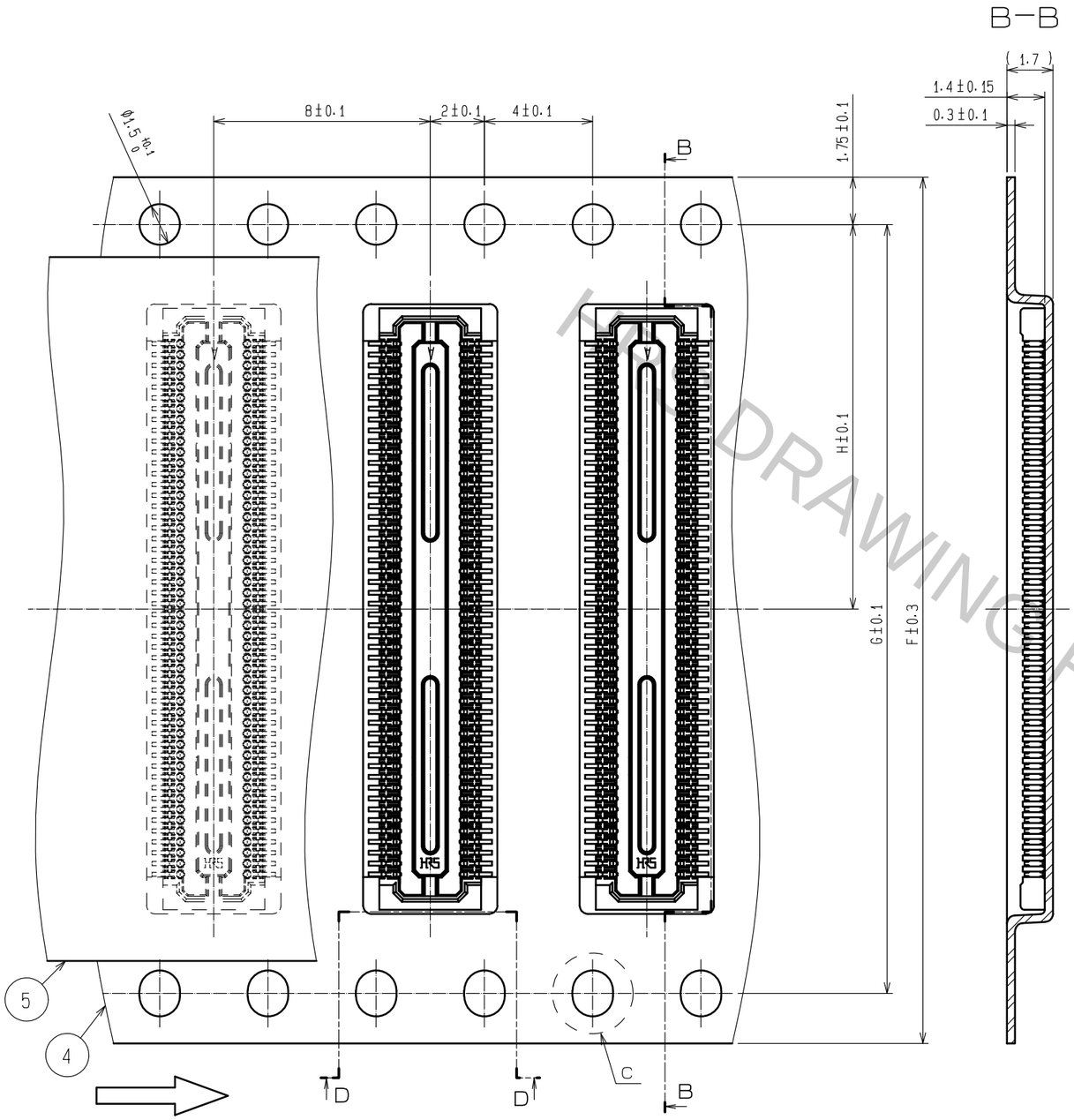

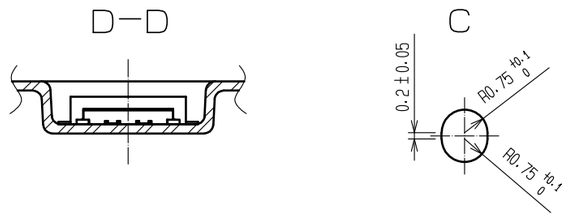

リール形状（FREE）

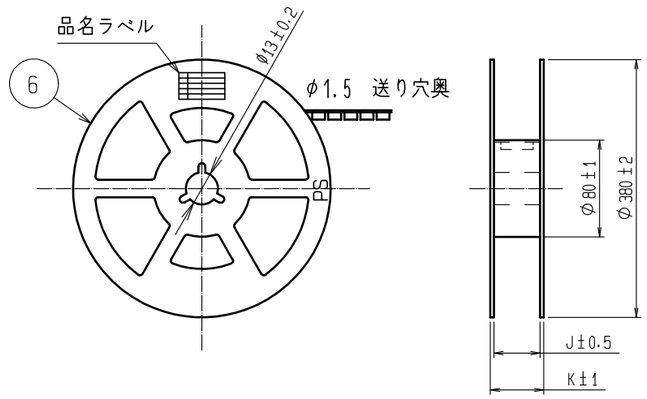

品名ラベル詳細

生産月日	年　月　日
図番	CL684−****−*−81
品名	DF30FB−*DS−0.4V(81)
納入数量	5000個
納入者	ヒロセ電機（株）

△2

PART NO.	CODE NO.	F	G	H	J	K
DF30FB- 80DS-0.4V(81)	CL684-1107-2-81	32	28.4	14.2	33.5	37.5
DF30FB- 70DS-0.4V(81)	CL684-1106-0-81	24	—	11.5	25.5	29.5
DF30FB- 60DS-0.4V(81)	CL684-1105-7-81	24	—	11.5	25.5	29.5
DF30FB- 50DS-0.4V(81)	CL684-1104-4-81	24	—	11.5	25.5	29.5
DF30FB- 44DS-0.4V(81)	CL684-1295-4-81	24	—	11.5	25.5	29.5
DF30FB- 40DS-0.4V(81)	CL684-1103-1-81	24	—	11.5	25.5	29.5
DF30FB- 34DS-0.4V(81)	CL684-1102-9-81	16	—	7.5	17.5	21.5
DF30FB- 30DS-0.4V(81)	CL684-1101-6-81	16	—	7.5	17.5	21.5
DF30FB- 24DS-0.4V(81)	CL684-1100-3-81	16	—	7.5	17.5	21.5
DF30FB- 22DS-0.4V(81)	CL684-1099-6-81	16	—	7.5	17.5	21.5
DF30FB- 20DS-0.4V(81)	CL684-1098-3-81	16	—	7.5	17.5	21.5

NOT FOR REFERENCE

HRS	DRAWING NO.	EDC3-303547-02
	PART NO.	DF30FB-*DS-0.4V(81)
	CODE NO.	CL684- △2 2/2