ELV AND RoHS COMPLIANT

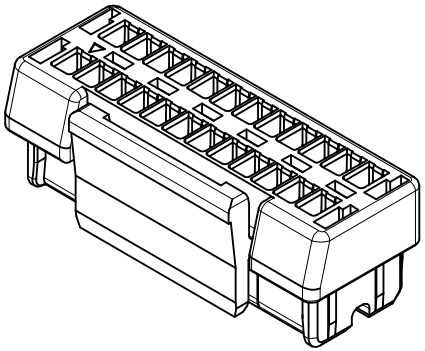

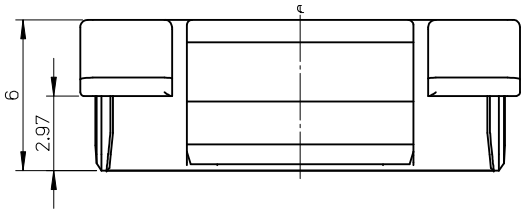

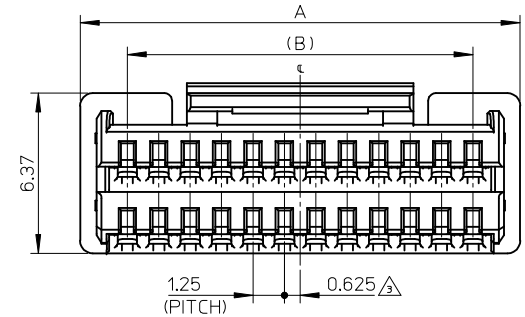

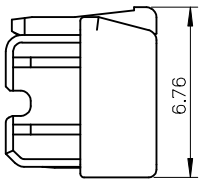

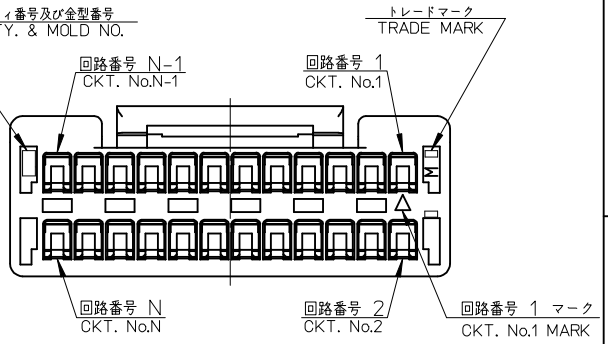

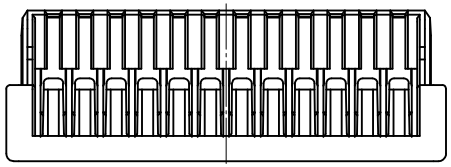

B	A	HSG COLOR GREEN	HSG COLOR BLUE	HSG COLOR RED	HSG COLOR BLACK	HSG COLOR NATURAL(WHITE)	極数 CKT. NO.
23.75	27.5	5041864006	5041864004	5041864002	5041864001	5041864000	40
22.5	26.25	5041863806	5041863804	5041863802	5041863801	5041863800	38
21.25	25	5041863606	5041863604	5041863602	5041863601	5041863600	36
20	23.75	5041863406	5041863404	5041863402	5041863401	5041863400	34
18.75	22.5	5041863206	5041863204	5041863202	5041863201	5041863200	32
17.5	21.25	5041863006	5041863004	5041863002	5041863001	5041863000	30
16.25	20	5041862806	5041862804	5041862802	5041862801	5041862800	28
15	18.75	5041862606	5041862604	5041862602	5041862601	5041862600	26
13.75	17.5	5041862406	5041862404	5041862402	5041862401	5041862400	24
12.5	16.25	5041862206	5041862204	5041862202	5041862201	5041862200	22
11.25	15	5041862006	5041862004	5041862002	5041862001	5041862000	20
10	13.75	5041861806	5041861804	5041861802	5041861801	5041861800	18
8.75	12.5	5041861606	5041861604	5041861602	5041861601	5041861600	16
		トレー TRAY PACKAGE オーダー番号 ORDER NO.	トレー TRAY PACKAGE オーダー番号 ORDER NO.	トレー TRAY PACKAGE オーダー番号 ORDER NO.	トレー TRAY PACKAGE オーダー番号 ORDER NO.	トレー TRAY PACKAGE オーダー番号 ORDER NO.	

NOTES

1. 適合ターミナル：504185-1000
   APPLICABLE TARMINAL : 504185-1000
2. 嵌合相手：504187-****/504189-****
   MATE WITH : 504187-****/504189-****
3. 極数／2＝偶数に適用。
   APPLY FOR CKT. SIZE / 2 = EVEN.
4. 本製品のプラスチック部に黒点等が確認される場合や
   色合いが異なる場合がありますが、製品性能に影響はありません。
   THERE IS NO INFLUENCE IN THE PRODUCT PERFORMANCE THOUGH
   THE BLACK SPOT ETC. MIGHT BE CONFIRMED TO THE PLASTIC PART
   OF THIS PRODUCT AND THE SHADE MIGHT BE DIFFERENT.
5. アプリケーション仕様書（コネクタ取扱説明書）：AS-504186-001/-002
   APPLICATION SPECIFICATIONS (CONNECTOR MANUAL): AS-504186-001/-002
6. 製品仕様書：PS-504186-001
   PRODUCT SPECIFICATION : PS-504186-001
7. 製品番号 MATERIAL No.

504186**0*

極数 CIRCUIT SIZE　色 COLOR

NO.	COLOR
0	NATURAL
1	BLACK
2	RED
4	BLUE
6	GREEN

部品 PART	材質 MATERIAL
ハウジング HOUSING	ポリエステル(PBT), UL94 V-0, 色：表参照 POLYESTER(PBT), UL94 V-0. COLOR : SEE TABLE

RELEASED
EC NO: J2014-0152
DRWN:SSAT002 2013/07/26
CH'KD:KASAKAWA 2013/07/30
APPR:NUKITA 2013/08/08
DESCRIPTION
REV 0

GENERAL TOLERANCES (UNLESS SPECIFIED)

10 UNDER	±0.2
10 OVER 30 UNDER	±0.25
30 OVER	±0.3
ANGULAR ±1 °	

DRAFT WHERE APPLICABLE MUST REMAIN WITHIN DIMENSIONS

DIMENSION STYLE: MM ONLY
SCALE: 5:1
DESIGN UNITS: METRIC
THIRD ANGLE PROJECTION

DRAWN BY: SSAT002 DATE: 2013/07/26
CHECKED BY: KASAKAWA DATE: 2013/07/30
APPROVED BY: NUKITA DATE: 2013/08/08

TITLE: 1.25 WTB DUAL SMT REC HOUSING

molex

MATERIAL NO.: SEE TABLE
DOCUMENT NO.: SD-504186-001
SHEET NO.: 1 OF 1
SIZE: A3

THIS DRAWING CONTAINS INFORMATION THAT IS PROPRIETARY TO MOLEX INCORPORATED AND SHOULD NOT BE NOT BE USED WITHOUT WRITTEN PERMISSION