High Current Connectors - UHV 25-KH/AS - 2130101

Please be informed that the data shown in this PDF Document is generated from our Online Catalog. Please find the complete data in the user's documentation. Our General Terms of Use for Downloads are valid
(http://download.phoenixcontact.com)

The illustration shows a combination of versions UHV 25-AS/AS, UHV 25-KH/AS and UHV 25-KH/KH

Universal terminal block with hybrid connection, cross section: 6 - 25 mm², AWG: 10 - 4, width: 26 mm, color: Gray

Product Features

- The UHV ... high-current connectors are available in several versions
- Versions are available with a cable lug or direct connection and there is a mixed version of both connection methods
- The comprehensive range of accessories, such as the connection rail for cross connection, ensures safe and user-friendly wiring of conductors up to 240 mm²

Key commercial data

Packing unit	1 1
GTIN	4 017918 052881
Weight per Piece (excluding packing)	109.78 GRM
Custom tariff number	85369010
Country of origin	India

Technical data

General

Number of levels	1
Number of connections	2
Color	gray
Insulating material	PA-F
Inflammability class according to UL 94	HB
Rated surge voltage	8 kV

High Current Connectors - UHV 25-KH/AS - 2130101

Technical data

General

Pollution degree	3
Surge voltage category	III
Insulating material group	II
Connection in acc. with standard	IEC 60947-7-1
Nominal current I_N	101 A
Nominal voltage U_N	1000 V
Open side panel	nein

Dimensions

Length	95 mm
Width	26 mm
Height NS 35/15	72 mm

Connection data

Conductor cross section solid min.	6 mm²
Conductor cross section solid max.	25 mm²
Conductor cross section stranded min.	10 mm²
Conductor cross section stranded max.	25 mm²
Conductor cross section AWG/kcmil min.	10
Conductor cross section AWG/kcmil max	3
Conductor cross section stranded, with ferrule without plastic sleeve min.	4 mm²
Conductor cross section stranded, with ferrule without plastic sleeve max.	25 mm²
Conductor cross section stranded, with ferrule with plastic sleeve min.	4 mm²
Conductor cross section stranded, with ferrule with plastic sleeve max.	25 mm²
2 conductors with same cross section, solid min.	2.5 mm²
2 conductors with same cross section, solid max.	10 mm²
2 conductors with same cross section, stranded min.	4 mm²
2 conductors with same cross section, stranded max.	10 mm²
2 conductors with same cross section, stranded, ferrules without plastic sleeve, min.	2.5 mm²
2 conductors with same cross section, stranded, ferrules without plastic sleeve, max.	10 mm²
Stripping length	21 mm
Screw thread	M5
Tightening torque, min	4 Nm
Tightening torque max	4.5 Nm
Connection method	Bolt connection
Connection in acc. with standard	DIN 46,235
Min. cross section	16 mm²

High Current Connectors - UHV 25-KH/AS - 2130101

Technical data

Connection data

Max. cross section	25 mm²
Hole diameter	8.4 mm
Bolt diameter	8 mm
Bolt thread	M8
Tightening torque, min	15 Nm
Tightening torque max	20 Nm
Connection in acc. with standard	DIN 46 234
Min. cross section	2.5 mm²
Max. cross section	25 mm²
Hole diameter	8.4 mm
Bolt diameter	8 mm
Bolt thread	M8
Tightening torque, min	15 Nm
Tightening torque max	20 Nm
Power rail	15 mm x 3 mm

Classifications

eCl@ss

eCl@ss 4.0	27141120
eCl@ss 4.1	27141120
eCl@ss 5.0	27141120
eCl@ss 5.1	27141120
eCl@ss 6.0	27141120
eCl@ss 7.0	27141120
eCl@ss 8.0	27141120

ETIM

ETIM 2.0	EC000897
ETIM 3.0	EC000897
ETIM 4.0	EC000897
ETIM 5.0	EC000897

UNSPSC

UNSPSC 6.01	30211811
UNSPSC 7.0901	39121410
UNSPSC 11	39121410
UNSPSC 12.01	39121410

High Current Connectors - UHV 25-KH/AS - 2130101

Classifications

UNSPSC

UNSPSC 13.2	39121410

Approvals

Approvals

Approvals

CSA / UL Recognized / GOST / GL / PRS / GOST

Ex Approvals

Approvals submitted

Approval details

CSA

	B	C
mm²/AWG/kcmil	6-4	6-4
Nominal current IN	100 A	100 A
Nominal voltage UN	600 V	600 V

UL Recognized

mm²/AWG/kcmil	6-4
Nominal current IN	85 A
Nominal voltage UN	600 V

GOST

GL

High Current Connectors - UHV 25-KH/AS - 2130101

Approvals

PRS

GOST

Accessories

Accessories

Bridge

Connection rail - UHV 25-VS 2 - 2130541

Connection rail, Number of positions: 2, Color: silver

Connection rail - UHV 25-VS 3 - 2130554

Connection rail, Number of positions: 3, Color: silver

Cover

Covering hood - UHV 25-AH - 2130431

Covering hood, Width: 22.8 mm, Height: 53.2 mm, Color: gray

End block

High Current Connectors - UHV 25-KH/AS - 2130101

Accessories

End clamp - E/AL-NS 32 - 1201659

End clamp, for end support of UKH 50 - UKH 240, is pushed onto DIN rail NS 32 and fixed with 2 screws, width: 10 mm, color: Aluminum

---

End clamp - E/AL-NS 35 - 1201662

End clamp, for end support of UKH 50 to UKH 240, is pushed onto DIN rail NS 35 and fixed with 2 screws, width: 10 mm, color: aluminum

---

Flange

End clamp - UHV -E - 2130428

End clamp, Width: 5.2 mm, Color: gray

Labeled terminal marker

Zack marker strip - ZB 10 CUS - 0824941

Zack marker strip, Can be ordered: Strip, white, Labeled according to customer specifications, Mounting type: Snap into tall marker groove, For terminal block width: 10.2 mm, Lettering field: 10.15 x 10.5 mm

---

Marker for terminal blocks - UC-TM 10 CUS - 0824605

Marker for terminal blocks, Can be ordered: By sheet, white, Labeled according to customer specifications, Mounting type: Snap into tall marker groove, For terminal block width: 10.2 mm, Lettering field: 9.6 x 10.5 mm

High Current Connectors - UHV 25-KH/AS - 2130101

Accessories

Marker for terminal blocks - UCT-TM 10 CUS - 0829623

Marker for terminal blocks, Can be ordered: By sheet, white, Labeled according to customer specifications, Mounting type: Snap into tall marker groove, For terminal block width: 10.2 mm, Lettering field: 8.9 x 9.6 mm

Mounting rail

DIN rail - NS 32 PERF 2000MM - 1201002

G-profile DIN rail, material: Steel, perforated, height 15 mm, width 32 mm, length 2 m

DIN rail - NS 32 UNPERF 2000MM - 1201015

G-profile DIN rail, material: Steel, unperforated, height 15 mm, width 32 mm, length 2 m

Partition plate

Separating plate - UHV -TP1 - 2130402

Separating plate, Width: 2 mm, Height: 67.5 mm, Color: gray

Screwdriver tools

High Current Connectors - UHV 25-KH/AS - 2130101

Accessories

Screwdriver - SZS 1,0X6,5 VDE - 1205079

Screwdriver, slot-headed, VDE insulated, size: 1.0 x 6.5 x 150 mm, 2-component grip, with non-slip grip

---

Terminal marking

Marker cards - SBS10:UNBEDRUCKT - 1007248

Marker cards, Card, white, Unlabeled, Can be labeled with: Plotter, Perforated, Mounting type: Snap into tall marker groove, Snap into flat marker groove, For terminal block width: 10 mm, Lettering field: 6 x 10.1 mm

---

Zack marker strip - ZB 10:UNBEDRUCKT - 1053001

Zack marker strip, Strip, white, Unlabeled, Can be labeled with: Plotter, Mounting type: Snap into tall marker groove, For terminal block width: 10.2 mm, Lettering field: 10.5 x 10.15 mm

---

Marker for terminal blocks - UC-TM 10 - 0818069

Marker for terminal blocks, Sheet, white, Unlabeled, Can be labeled with: BLUEMARK CLED, BLUEMARK LED, Plotter, Mounting type: Snap into tall marker groove, For terminal block width: 10.2 mm, Lettering field: 9.6 x 10.5 mm

---

Marker for terminal blocks - UCT-TM 10 - 0829142

Marker for terminal blocks, Sheet, white, Unlabeled, Can be labeled with: THERMOMARK CARD PLUS, THERMOMARK CARD, BLUEMARK CLED, BLUEMARK LED, Mounting type: Snap into tall marker groove, For terminal block width: 10.2 mm, Lettering field: 8.9 x 9.6 mm

---

High Current Connectors - UHV 25-KH/AS - 2130101

Drawings

Pictogram

Circuit diagram

Dimensioned drawing

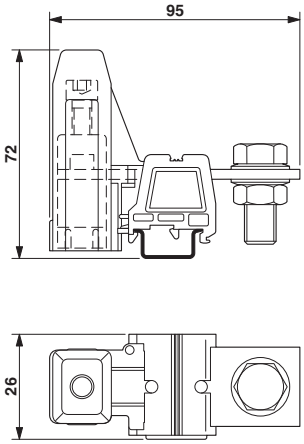

Dimensioned drawing

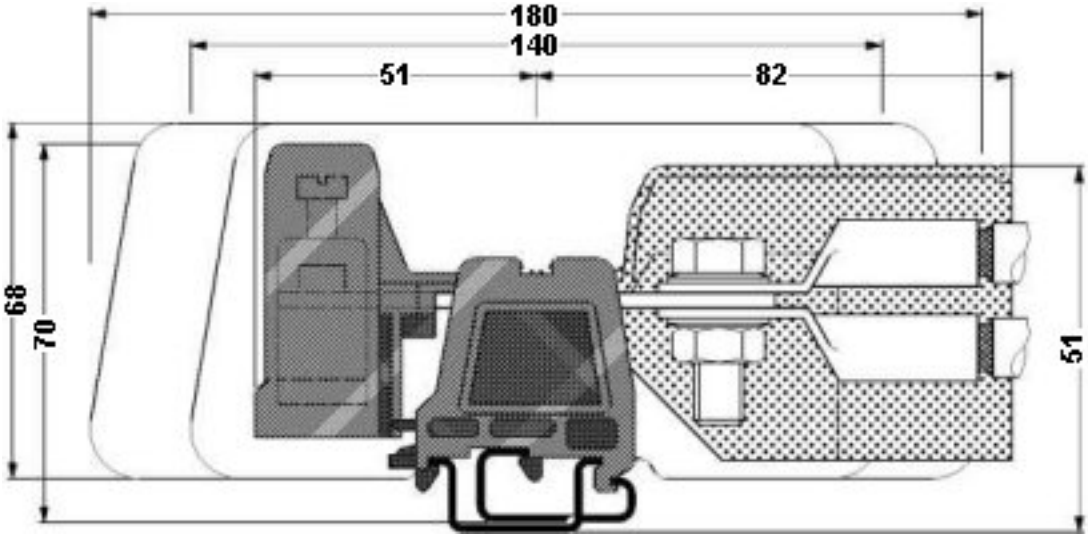

High Current Connectors - UHV 25-KH/AS - 2130101

Circuit diagram

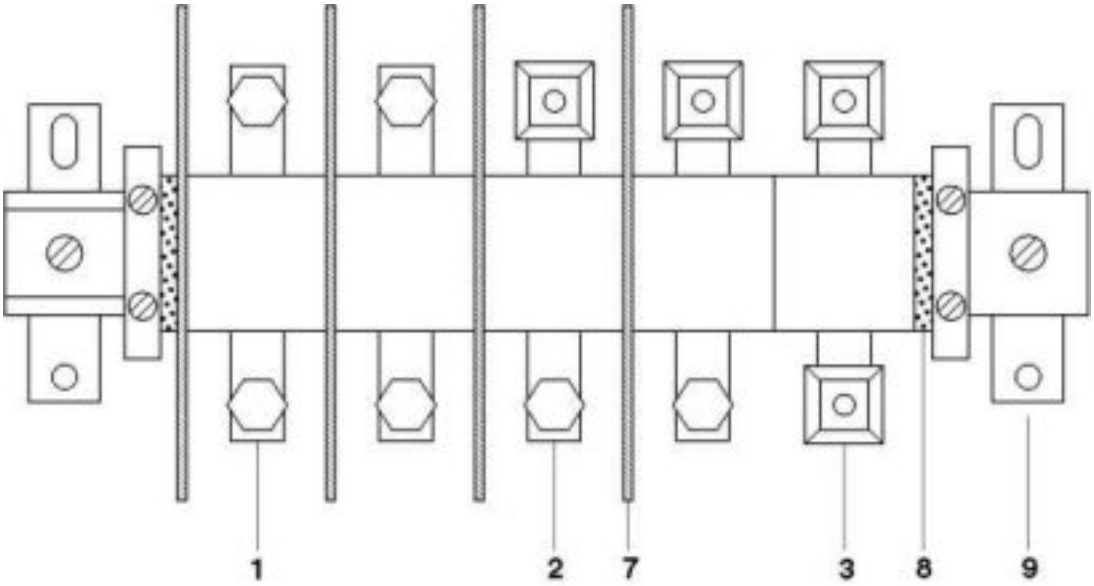

1 = high current connector, AS screw set on both sides
2 = high current connector, terminal sleeve KH on one side, screw set AS on the other side
3 = high current connector, terminal sleeves KH on both sides, for direct cable connection
7 = separating plate
8 = end piece
9 = flat bracket

© Phoenix Contact 2013 - all rights reserved
http://www.phoenixcontact.com