THIS DRAWING IS UNPUBLISHED. RELEASED FOR PUBLICATION 20
© COPYRIGHT 20 BY - ALL RIGHTS RESERVED.

REVISIONS

P	LTR	DESCRIPTION	DATE	DWN	APVD
	A	INITIAL RELEASE	19DEC2016	N.P	X.X

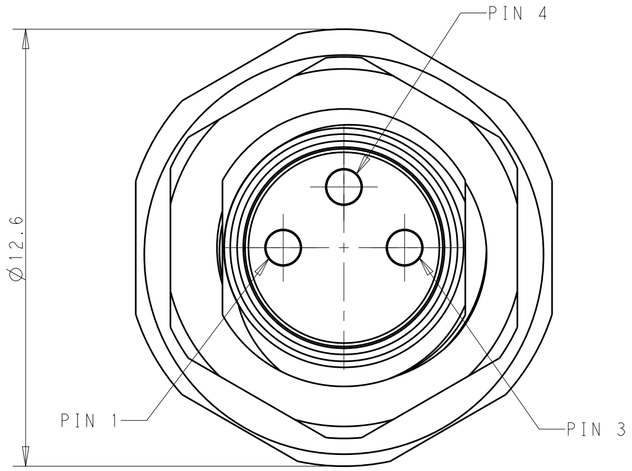

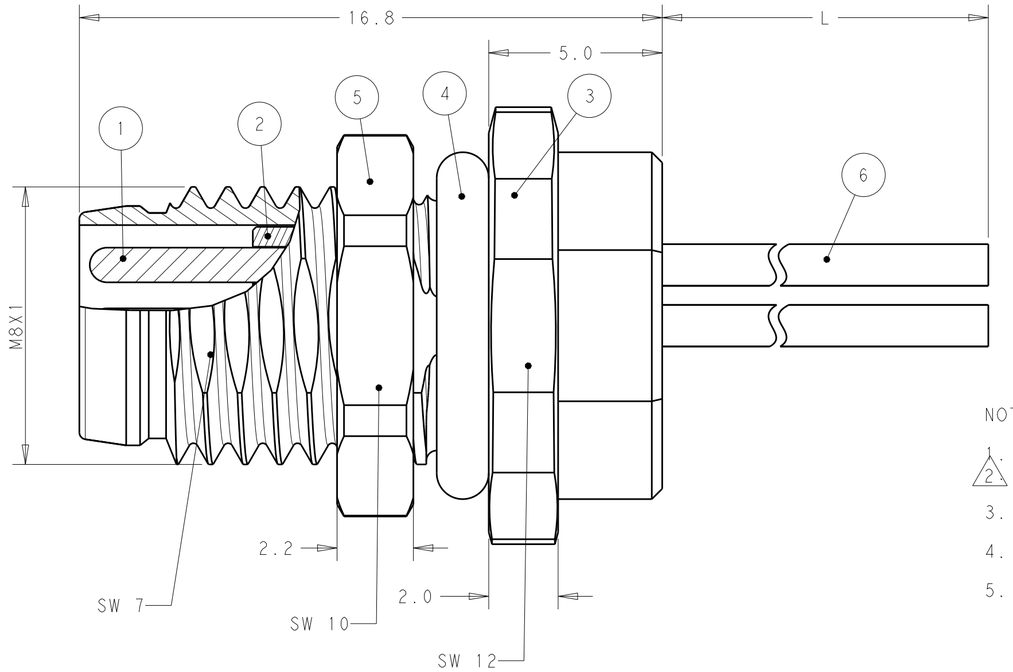

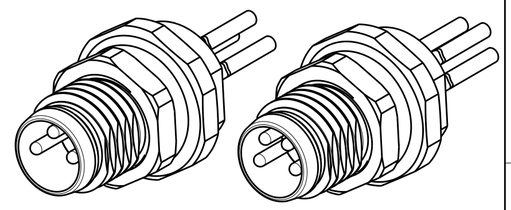

NOTES:

1. TECHNICAL DATA: SEE TABLE 1
2. THE RELEATION BETWEEN WIRE COLOR AND PIN IS: PIN1 BROWN;PIN2 WHITE; PIN3 BLUE;PIN4 BLACK;
3. CABLE LENGHT:-001:0.2m;-002:0.5m;-003:1.0m; -004:1.5m;-005:3m;-006:5m; FOR SPECIAL LENGHT
4. IF CUSTOMER NEED OTHER CABLE LENGTH, PLEASE CONTACT TE PRODUCT MANAGER OR SALES FOR HELP.
5. ALL PRODUCT MUST COMPLIANCE WITH ROHS AND REACH.

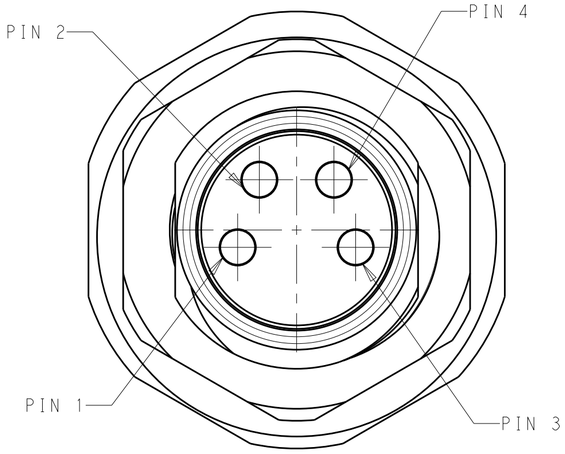

注意事项

1. 技术参数：见表1
2. PIN数与线颜色的关系是：PIN1棕色线，PIN2白色线，PIN3蓝色线，PIN4黑色线；
3. 线长：-00X， -001:0.2m;-002:0.5m;-003:1.0m; -004:1.5m;-005:3m;-006:5m;
4. 如果客户需要定制别的长度，请联系TE销售或者产品经理；
5. 产品必须符合ROHS与REACH.

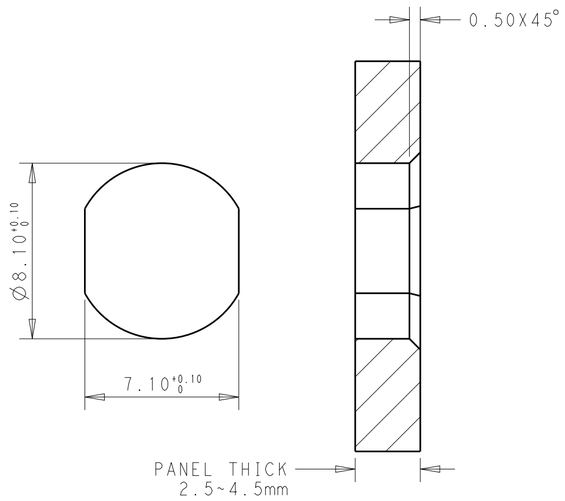

RECOMMENDED PANEL SIZE

TABLE 1

TECHNICAL DATA	T4070014031-00X	T4070014041-00X
RATED IMPULSE VOLTAGE	1500V	800V
RATED VOLTAGE	60V	30V
RATED CURRENT	3A	
POLLETION DEGREE	3	
OVERVOLTAGE CATEGORY	II	
MATERIAL GROUP	II	
DEGREE OF PROTECTION	IP67	
TEMPERATURE	-40°C~85°C	

	WIRE	6
COPPER ALLOY	NUT	5
RUBBER	O-RING	4
COPPER ALLOY	BODY NUT	3
PA66 UL94 V0	HOUSING	2
COPPER ALLOY	CONTACT	1
MATERIAL	DESCRIPITON	ITEM

TYPE	POS.	PART NUMBER
RPC-M8-MF-4CON-M8-0.2LA	4	T4070014041-001
RPC-M8-MF-3CON-M8-0.2LA	3	T4070014031-001

THIS DRAWING IS A CONTROLLED DOCUMENT.

DIMENSIONS: mm

TOLERANCES UNLESS OTHERWISE SPECIFIED:
0 PLC ±-
1 PLC ±0.25
2 PLC ±0.15
3 PLC ±
4 PLC ±
ANGLES ±-

MATERIAL: TBD material_2
FINISH: - finish_spec_2

DWN 08DEC2016 Nick Pan
CHK 08DEC2016 Kobby Zhao
APVD 08DEC2016 Xiang Xu
PRODUCT SPEC 108-106140
APPLICATION SPEC 114-137144-1
WEIGHT -

TE Connectivity

NAME: M8 PANEL CONNECTOR WITH SIGNLE WIRE MALE SIDE REAR MOUNTING
-

SIZE A2 | CAGE CODE - | DRAWING NO C-T40700140X100X | RESTRICTED TO -

CUSTOMER DRAWING | SCALE 6:1 | SHEET 1 OF 1 | REV A

1471-9 (3/13)