THIS DRAWING IS UNPUBLISHED. RELEASED FOR PUBLICATION 1997
© COPYRIGHT 1997 BY TYCO ELECTRONICS CORPORATION. ALL RIGHTS RESERVED.

LOC	DIST
A1	

REVISIONS

P	LTR	DESCRIPTION	DATE	DWN	APVD
	B3	ECR-10-017493	28.11.11	SR	AR

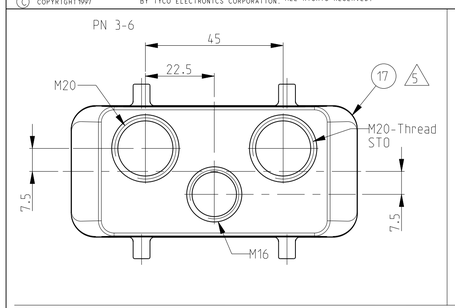

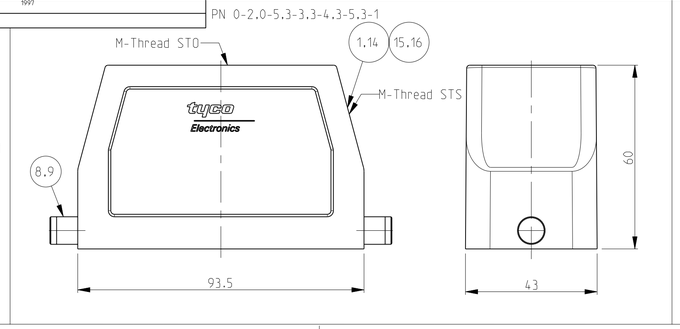

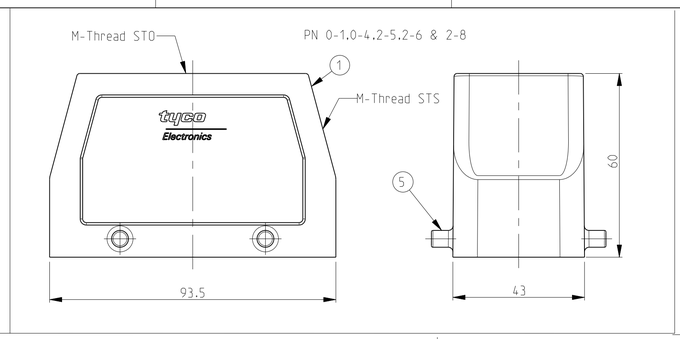

NOTES

1 Surface:- -Powder varnish grey
-Aluminium oxide+-Varnish black
-Chromital TCP passivation+varnish black

2 Varnish on the inside not necessary

3 Packaging
Packaging quantity 5 piece in a box

4 Special Packaging

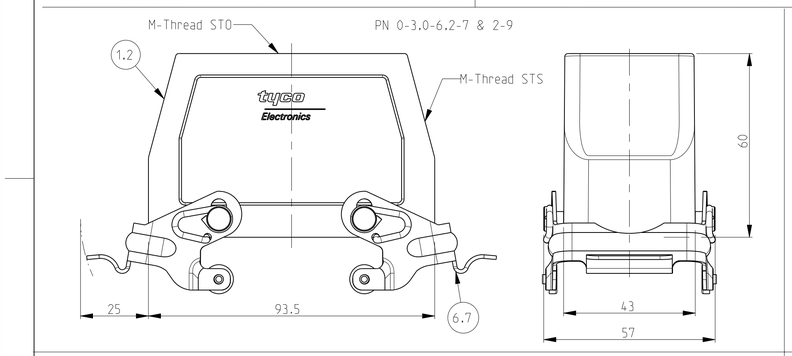

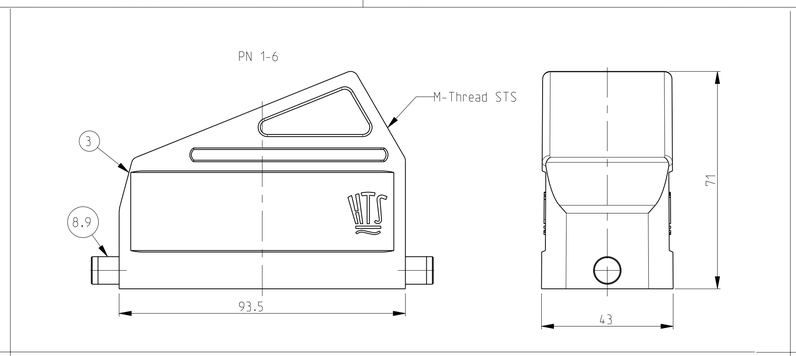

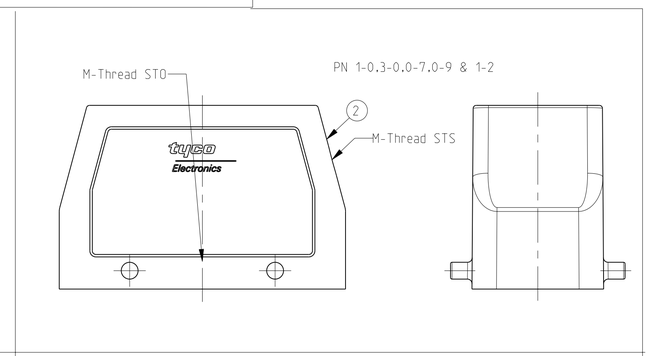

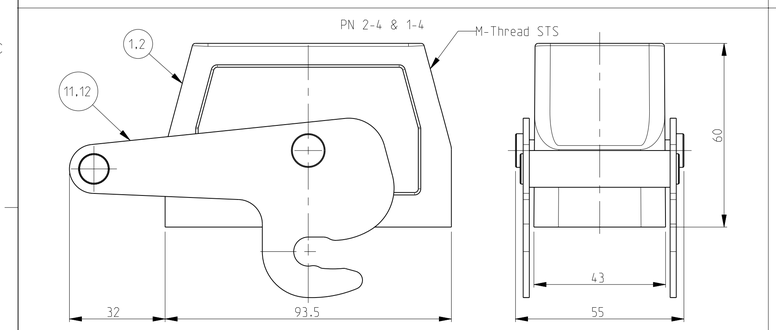

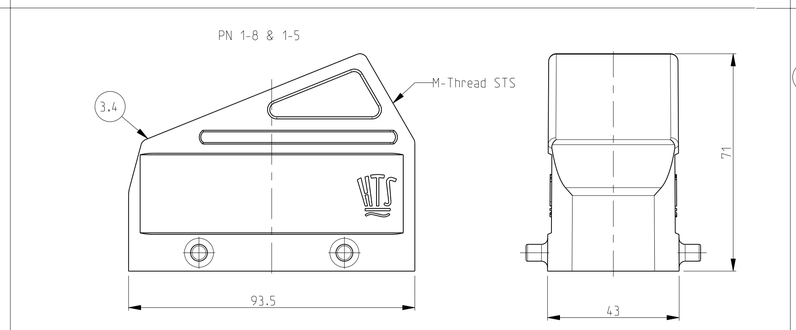

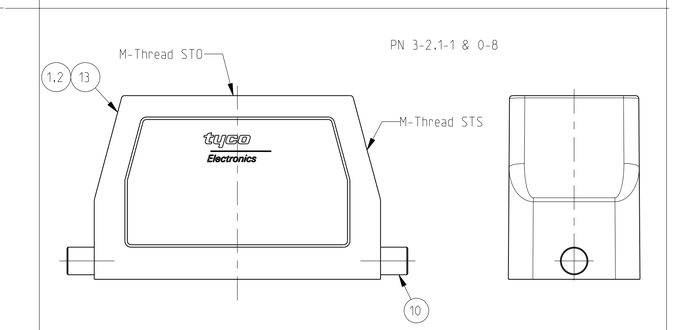

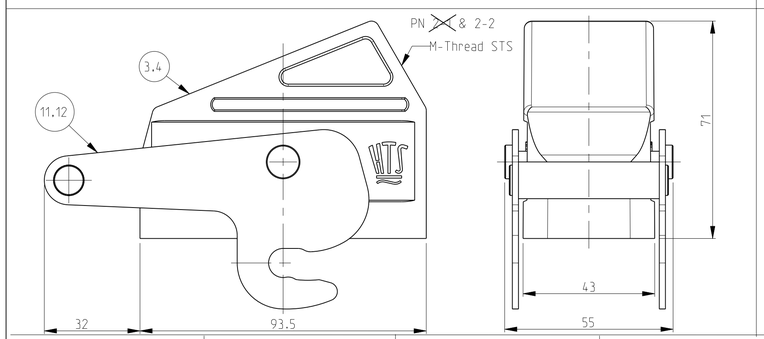

3-6	3-5	3-4	3-3	3-2	0-9	2-9	3-1	2-8	2-7	2-6	1-6	3-0	2-5	2-1	2-2	1-8	1-5	1-4	2-4	1-1	0-5	0-8	0-2	0-6	1-2	0-3	1-0	0-4	0-7	0-1	DESCRIPTION	MATERIAL	SURFACE	COLOR	ITEM NO	NOTES
1																															HB Hood	Aluminium		Grey	17	5
	1																														HB-EMV Hood	Aluminium	SEE NOTE 1	Black	16	
		1																													HB Hood	Aluminium		Grey	15	
			1																												HB Hood	Aluminium		Fire red, RAL 3000	14	
				1																											HB-EMV Hood	Aluminium	SEE NOTE 1	With out varnish	13	
													1					1												ZB-Clip bolt	Stainless steel	Blank		12	
															1				1												ZB-Clip bolt	Steel	Zinc plated	Blue	11	
				2																2		2									LB-Clip bolt	Stainless steel	Blank		10	
	2	2	2				2				2										2		2								LB-Clip bolt	Steel	Zinc plated	Blue	9	
	2	2	2				2				2										2		2								LB-Side clip	Steel	Zinc plated	Blue	8	
						2																									VS-Locking Clip	Stainless steel	Blank		7	
									2															2		2					VS-Locking Clip	Steel	Zinc plated	Blue	6	
																															VS-Clip bolt	Stainless steel	Blank		5	
														1		1															HB-K Hood	Aluminium	Aluminium oxide	Black	4	
											1				1		1														HB Hood	Aluminium		Grey	3	
					1	1						1						1		1		1			1		1		1		HB-K Hood	Aluminium	Aluminium oxide	Black	2	
							1	1	1	1			1						1		1		1	1		1		1		1	HB Hood	Aluminium		Grey	1	
HB.16.STO.1.M16+2.M20.G	HB-EMV.16.STS-GR.1.M32.G	HB.16.STS-GR.1.M25.G	HB.16.STS-GR.1.M32.G.not	HB-EMV.16.STS-GR.1.M32.G	HB-K.16.STO-VS.1.M32.G	HB.16.STS-VS.1.M32.G.KM	HB.16.STS-GR.1.M32.G.KM	HB.16.STS.1.M32.G.KM	HB.16.STO-VS.1.M32.G.KM	HB.16.STO.1.M32.G.KM	HB-KF.16.STS-GR.1.M32.G	HB-K.16.STO.1.M25.G	HB.16.STS.1.M25.G	~~HB-K/KF.Z16.STS-ZB.1.M32.G~~ OBSOLETE	HB-KF.Z16.STS-ZB.1.M32.G	HB-K/KF.16.STS.1.M32.G	HB-KF.16.STS.1.M32.G	HB-K/Z.16.STS-ZB.1.M32.G	HB-Z.16.STS-ZB.1.M32.G	HB-K.16.STS-GR.1.M32.G	HB.16.STS-GR.1.M32.G	HB-K.16.STO-GR.1.M32.G	HB.16.STO-GR.1.M32.G	HB-K.16.STS-VS.1.M32.G	HB-K.16.STS.1.M32.G	HB-K.16.STS.1.M32.G	HB.16.STS.1.M32.G	HB-K.16.STO.1.M32.G	HB.16.STO.1.M32.G	ORDERING TEXT					

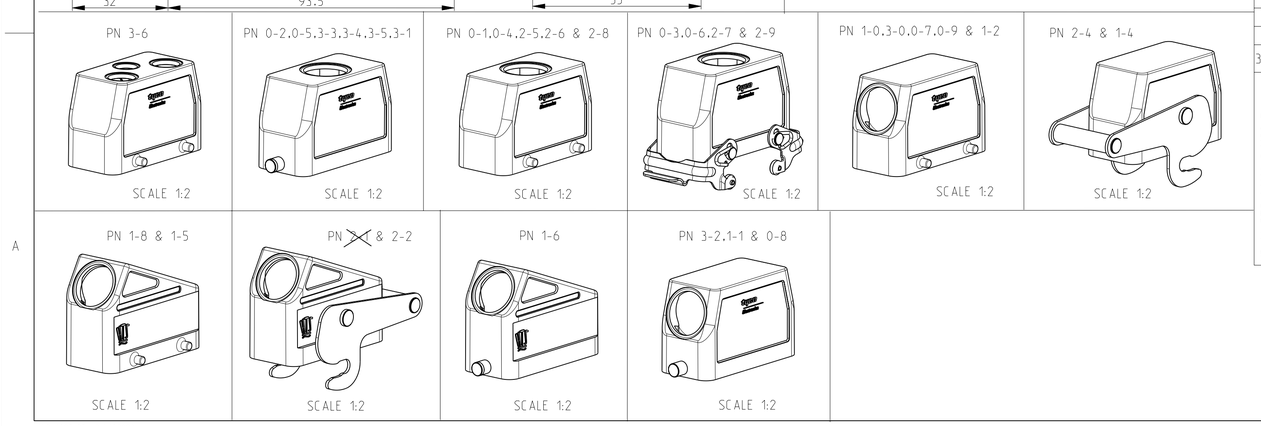

THIS DRAWING IS A CONTROLLED DOCUMENT FOR TYCO ELECTRONICS CORPORATION
IT IS SUBJECT TO CHANGE AND THE CONTROLLING ENGINEERING ORGANIZATION
SHOULD BE CONTACTED FOR THE LATEST REVISION.

DIMENSIONS: mm

TOLERANCES UNLESS OTHERWISE SPECIFIED:
ISO 2768-mK
ASME Y14.5M-1994
0 PLC ±
1 PLC ±
2 PLC ±
3 PLC ±
4 PLC ±
ANGLES ±

MATERIAL

FINISH

DWN Schneider	16.01.2002	Tyco Electronics, AMP, GmbH
CHK Schweiger	16.01.2002	D-53819, Neunkirchen, Germany
APVD -		NAME Hood HB.16.M32.G -
PRODUCT SPEC	108-74001 108-74003	
APPLICATION SPEC	114-74001 114-74004	
WEIGHT		SIZE A1 · CAGE CODE 00779 · DRAWING NO C-1106449 · RESTRICTED TO -
CUSTOMER DRAWING		SCALE 1:1 · SHEET 1 OF 1 · REV B3