THIS DRAWING IS UNPUBLISHED. RELEASED FOR PUBLICATION .1997
© COPYRIGHT 1997 BY TYCO ELECTRONICS CORPORATION. ALL RIGHTS RESERVED.

LOC	DIST
A1	-

REVISIONS

P	LTR	DESCRIPTION	DATE	DWN	APVD
	A2	Released as per ECR-07-030419	17.12.07	SP	TS
	A3	REVISED PER ECO-09-027197	11FEB10	KK	HMR

PN 1-5 & 2-5

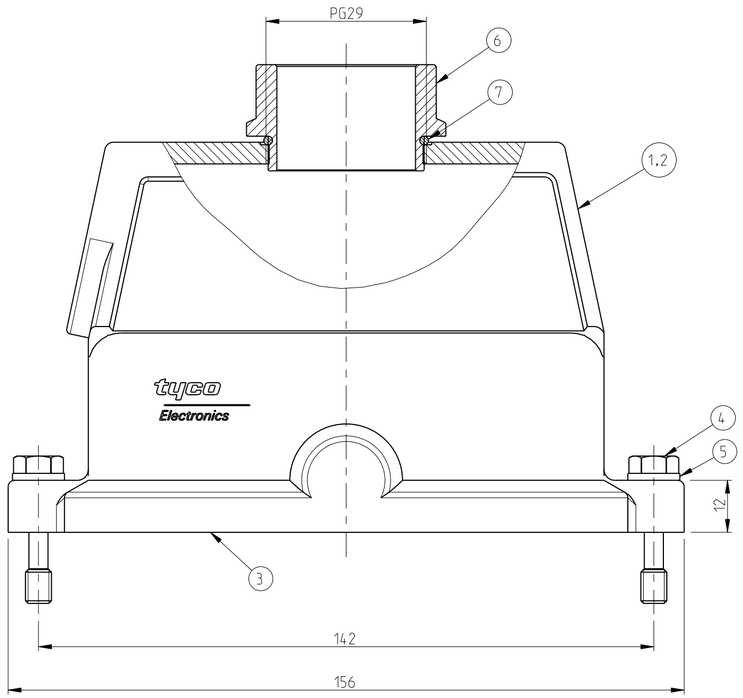

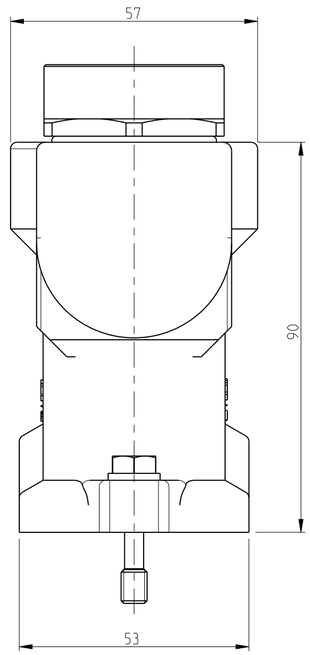

NOTES

1 Material: Housing: Aluminium Diecasting Alloy
Seals:Neoprene

2 Surface:- varnish-grey
Aluminium oxide+
Varnish black

3 Varnish on the inside not necessary

4 Packaging quantity: 5 pieces in a box

5 OBSOLETE PARTS: OBSOLETE CIS STREAMLINING PER D.RENAUD/D.SINISI

PN 1-5 & 2-5

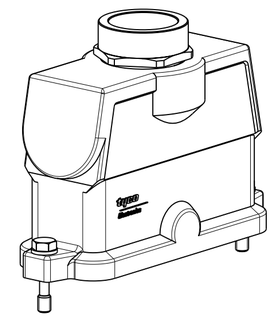

SCALE 1:2

5 OBSOLETE

2-5	1-5	DESCRIPTION	MATERIAL	SURFACE	COLOR	ITEM NO	REMARKS
1	1	O-Ring PG29	Neoprene	-	Black	7	
1	1	Adaptor PG29	Brass	Nickel plated		6	
2	2	Spring washer	Stainless steel	Blank		5	
2	2	Fixing screw	Stainless steel	Blank		4	
1	1	O-Ring Bg8	Neoprene	-	Black	3	
1	-	Hood HIP Bg8	Aluminium	Aluminium oxide	Black	2	
-	1	Hood HIP Bg8	Aluminium	-	Grey	1	

ORDERING TEXT
HIP.24/64.STO.1.29.Z
HIP-K.24/64.STO.1.29.Z

THIS DRAWING IS A CONTROLLED DOCUMENT FOR TYCO ELECTRONICS CORPORATION. IT IS SUBJECT TO CHANGE AND THE CONTROLLING ENGINEERING ORGANIZATION SHOULD BE CONTACTED FOR THE LATEST REVISION.

DIMENSIONS: mm

TOLERANCES UNLESS OTHERWISE SPECIFIED:
n.ISO 8015:
n.ISO 2768-mH-E:
n.DIN 16901-120
0 PLC ±
1 PLC ±
2 PLC ±
3 PLC ±
4 PLC ±
ANGLES ±

MATERIAL

FINISH

DWN Schneider 12.06.01
CHK Schweiger 12.06.01
APVD -
PRODUCT SPEC 108-74030
APPLICATION SPEC 114-74017
WEIGHT 540 g

Tyco Electronics
Tyco Electronics Corporation.AMP.GmbH
D-53819.Neunkirchen.Germany

NAME
Hood HIP Size8
HIP.24/64.STO.1.29.Z

SIZE	CAGE CODE	DRAWING NO	RESTRICTED TO
A2	00779	C-1102663	

CUSTOMER DRAWING

SCALE	SHEET	OF	REV
1:1	1	1	A3

AMP 1471-9 REV 31MAR2000

Pro/ENGINEER DRAWING