PRODUCT NUMBER

10115130-001LF

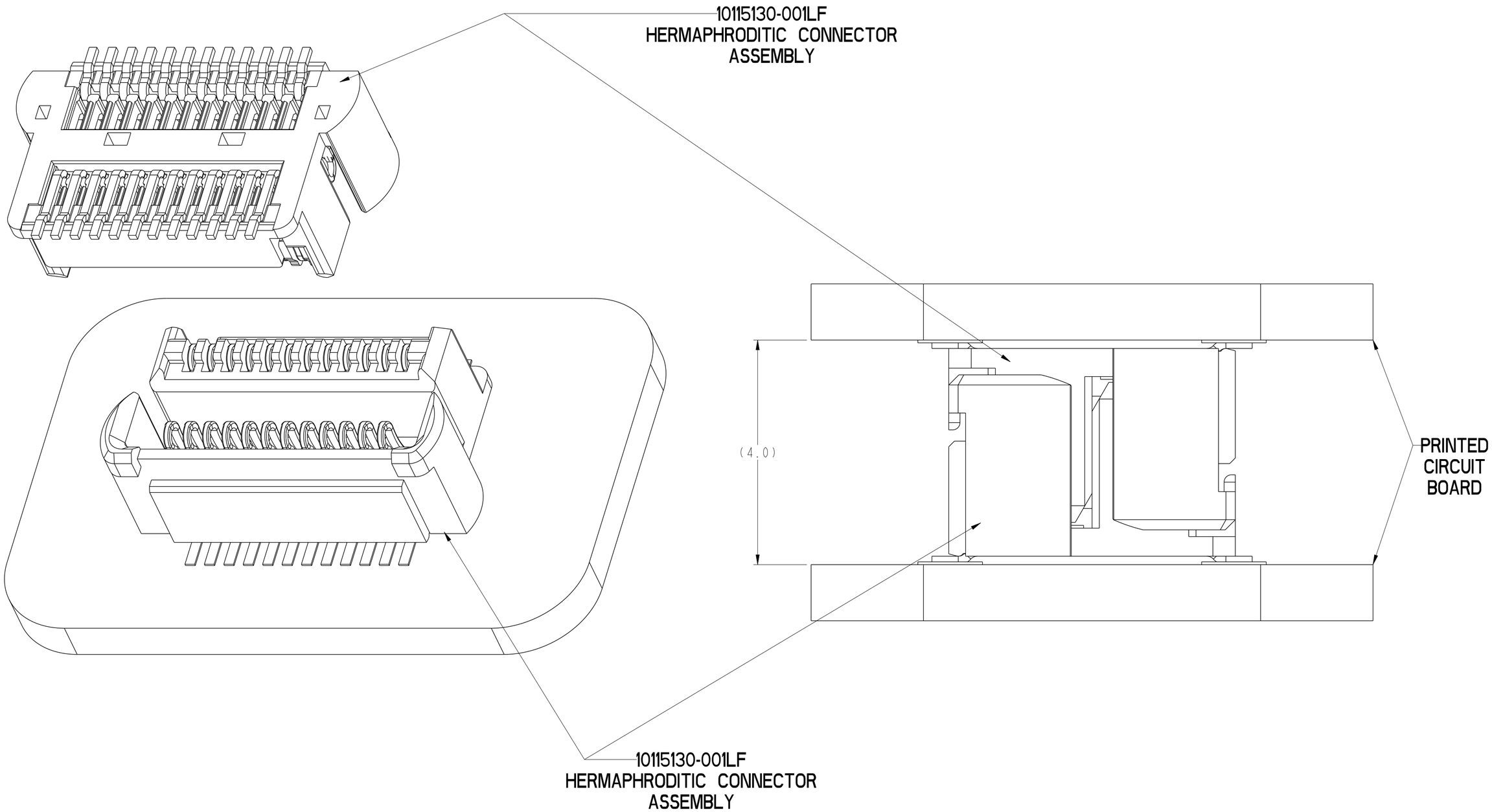


| | | | | | | | | | |
|---|---|---|---|---|---|---|---|---|---|
| spec ref | --- | | | dr | Stu Stoner | 2011/03/09 | projection | mm | size A2 / scale 11:1 |
| tolerance std ASME Y14.5 | TOLERANCES UNLESS OTHERWISE SPECIFIED | | | eng | Sandar Soe | 2016/01/28 | | | ecn no ELX-DG-23104-1 |
| | | | | chr | - | - | | | |
| | | | | appr | Pei-Ming Zheng | 2016/02/04 | product family | MezzoStak | rel level Released |
| surface - | linear | 0.X | ±0.3 | FCI | title | HERMAPHRODITIC CONNECTOR, SPECIAL 24 POS, 0.5MM CTR, 4MM STACK HT | dwg no | 10115130 | rev G |
| | | 0.XX | ±0.10 | | | | | | |
| | | 0.XXX | ±0.05 | | | | | | |
| ASME Y14.5 | angular | 0° | ±2° | www.fci.com | cat. no. | - | Product - Customer Drw | | sheet 1 of 9 |

Copyright FCI.

| PRODUCT NUMBER |
|---|
| 10115130-001LF |

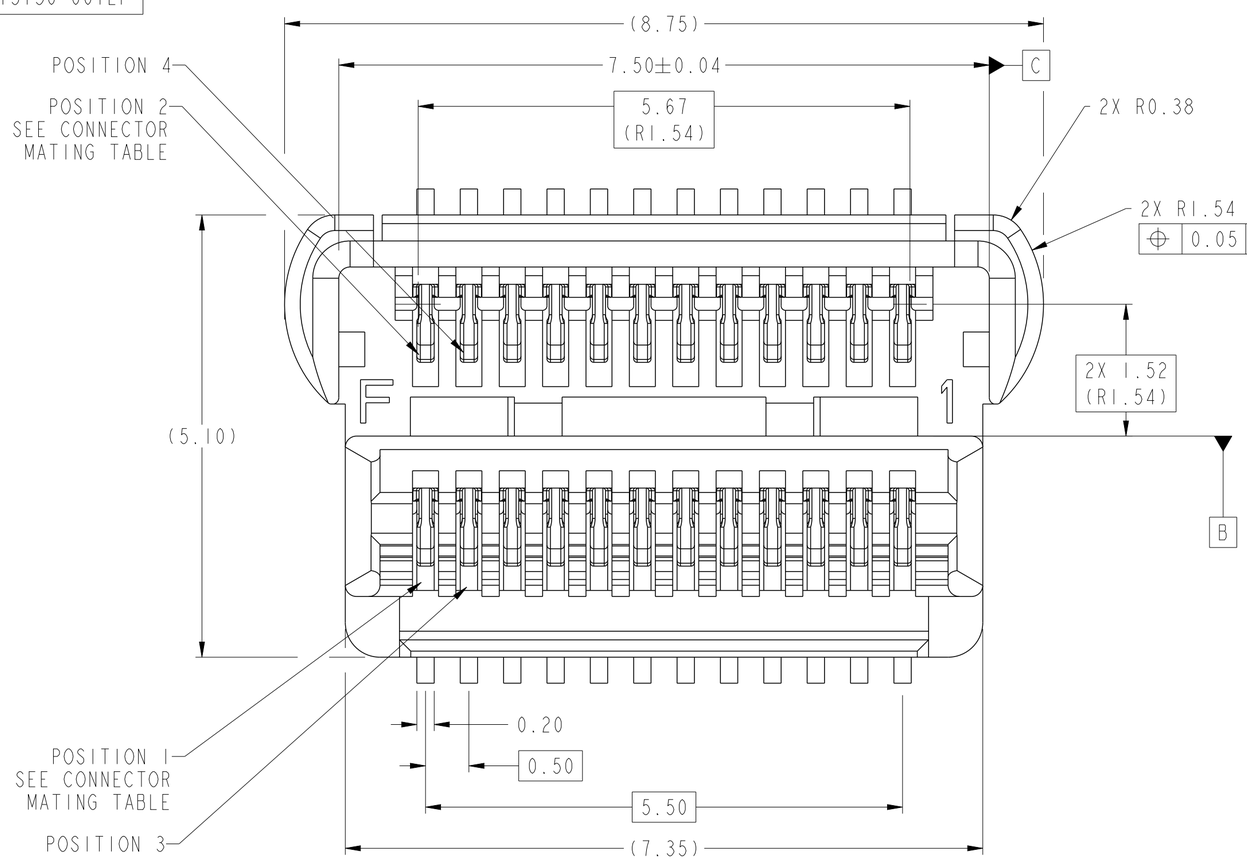


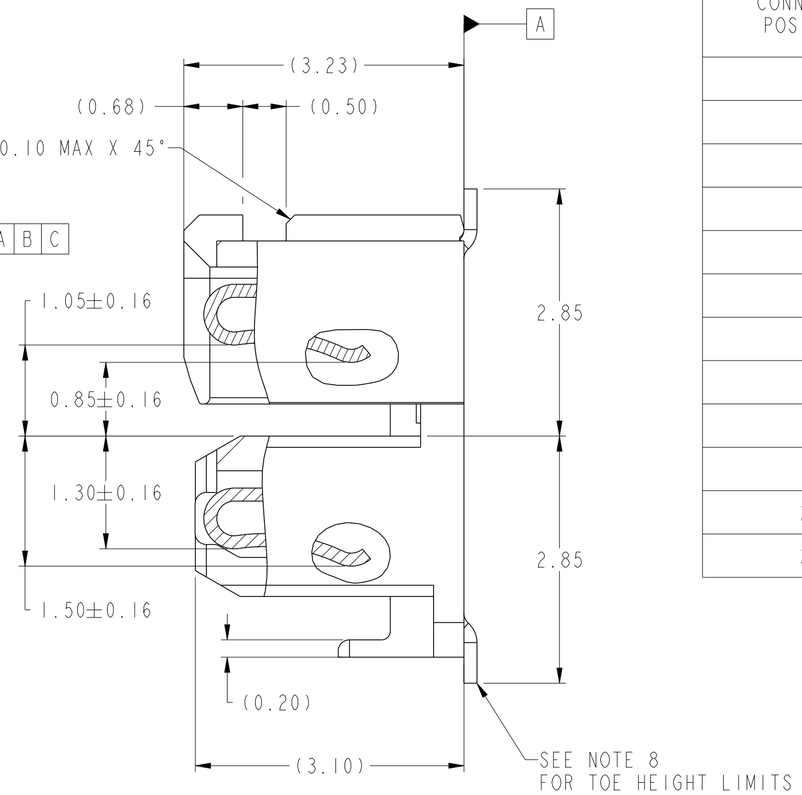


| HERMAPHRODITIC CONNECTOR MATING | |
|---|---|
| CONNECTOR POSITION | MATES WITH CONNECTOR POSITION |
| 1 | 2 |
| 3 | 4 |
| 5 | 6 |
| 7 | 8 |
| 9 | 10 |
| 11 | 12 |
| 13 | 14 |
| 15 | 16 |
| 17 | 18 |
| 19 | 20 |
| 21 | 22 |
| 23 | 24 |

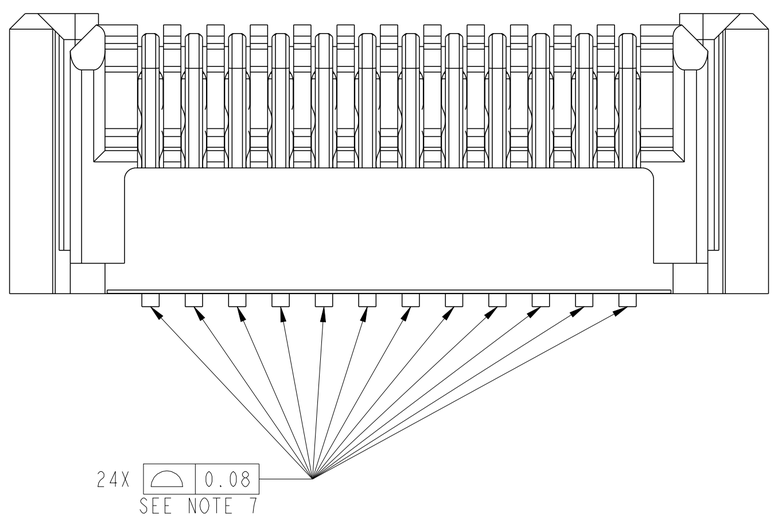


10115130-001LF SHOWN
WITHOUT STANDARD PICK-UP CAP

| | | | | | | | |
|---|---|---|---|---|---|---|---|
| spec ref --- | | | dr Stu Stoner 2011/03/09 | projection | mm | size A2 | scale 20:1 |
| tolerance std ASME Y14.5 | TOLERANCES UNLESS OTHERWISE SPECIFIED | | eng Sandar Soe 2016/01/28 | | | ecn no ELX-DG-23104-1 | |
| | | | chr - - | | | | |
| | | | appr Pei-Ming Zheng 2016/02/04 | product family MezzoStak | | rel level Released | |
| surface - | linear | 0.X ±0.3 | title HERMAPHRODITIC CONNECTOR, SPECIAL | | | dwg no 10115130 | rev G |
| | | 0.XX ±0.10 | 24 POS, 0.5MM CTR, 4MM STACK HT | | | | |
| | | 0.XXX ±0.05 | | | | | |
| ASME Y14.5 | angular | 0° ±2° | www.fci.com | cat. no. - | Product - Customer Drw | | sheet 2 of 9 |

Copyright FCI.

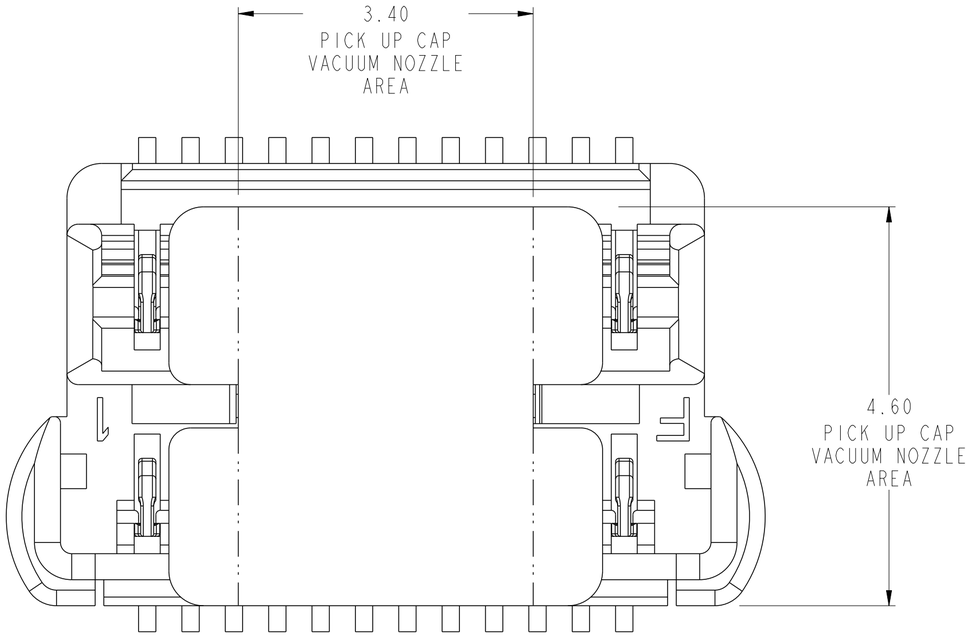


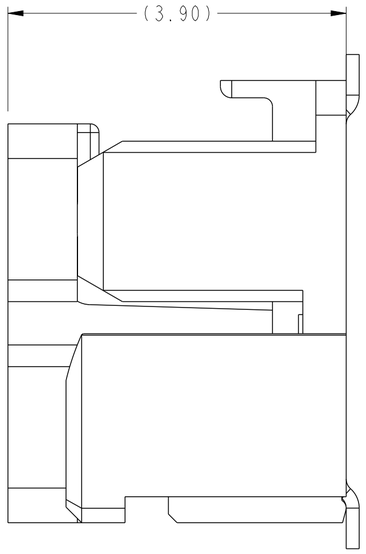


10115130-001LF SHOWN
WITH STANDARD PICK-UP CAP

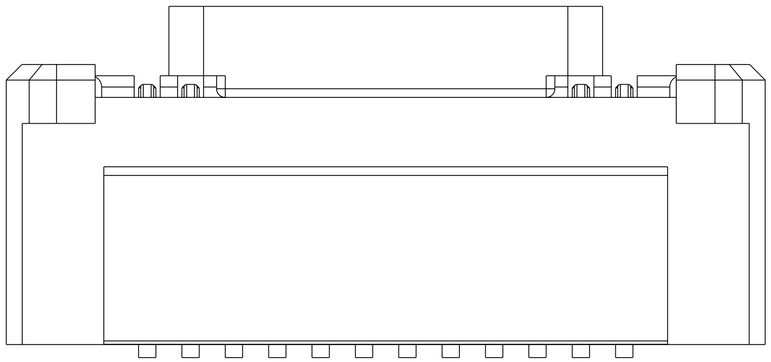

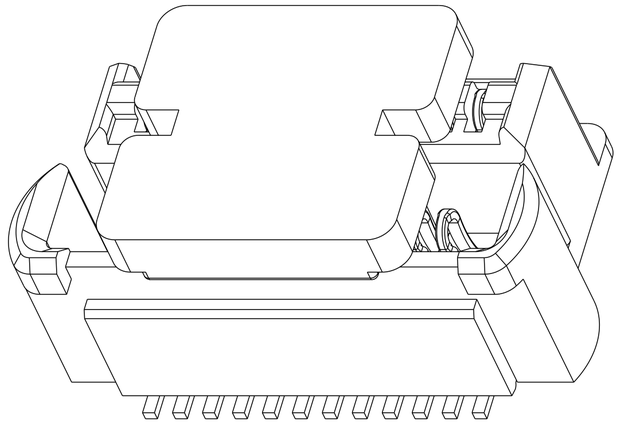

| | | | | | | | | |
|---|---|---|---|---|---|---|---|---|
| spec ref | --- | | | dr | Stu Stoner | 2011/03/09 | projection | mm | size A2 | scale 20:1 |
| tolerance std ASME Y14.5 | TOLERANCES UNLESS OTHERWISE SPECIFIED | | | eng | Sandar Soe | 2016/01/28 | | | ecn no | ELX-DG-23104-1 |
| | | | | chr | - | - | | | | |
| | | | | appr | Pei-Ming Zheng | 2016/02/04 | product family | MezzoStak | rel level | Released |
| surface - ASME Y14.5 | linear | 0.X | ±0.3 | FCI | title | HERMAPHRODITIC CONNECTOR, SPECIAL 24 POS, 0.5MM CTR, 4MM STACK HT | dwg no | 10115130 | rev G |
| | | 0.XX | ±0.10 | | | | | | |
| | | 0.XXX | ±0.05 | | | | | | |
| | angular | 0° | ±2° | www.fci.com | cat. no. | - | Product - Customer Drw | | sheet 3 of 9 |

Copyright FCI.

| PRODUCT NUMBER | LOCATING POSTS OPTION |
|---|---|
| 10115130-003LF | WITH LOCATING POSTS |
| 10115130-004LF | WITH OUTHOUT LOCATING POSTS |

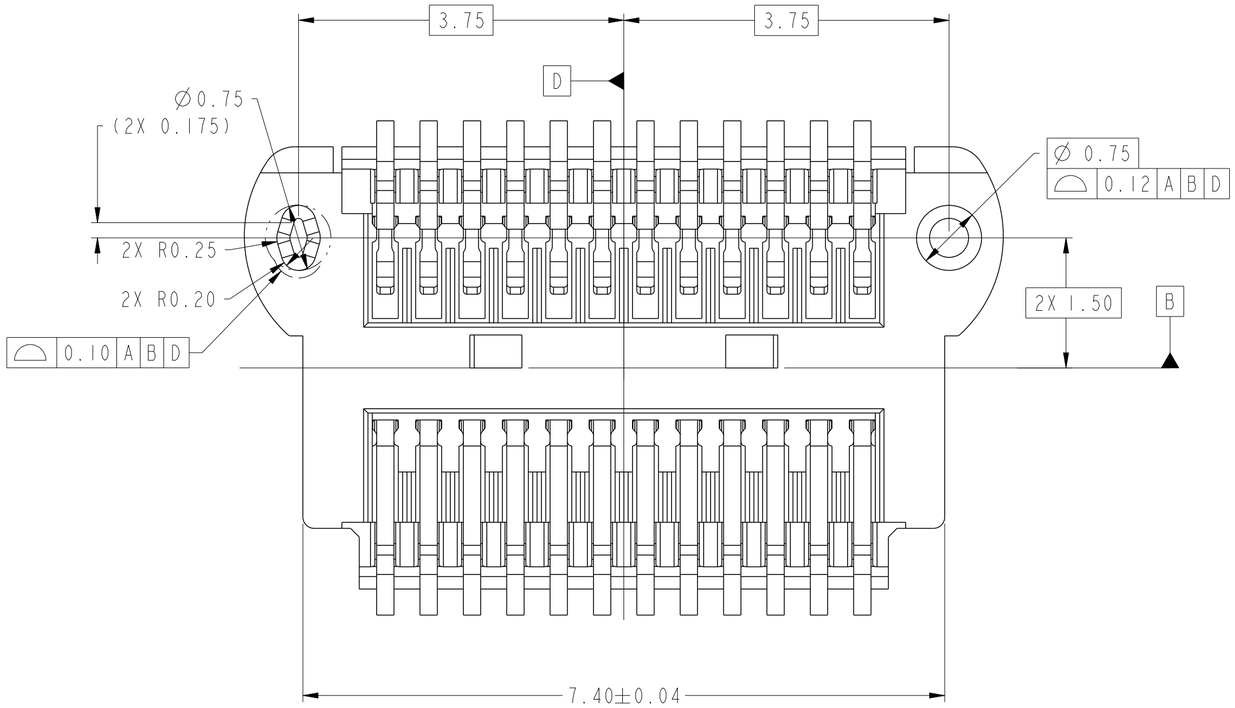


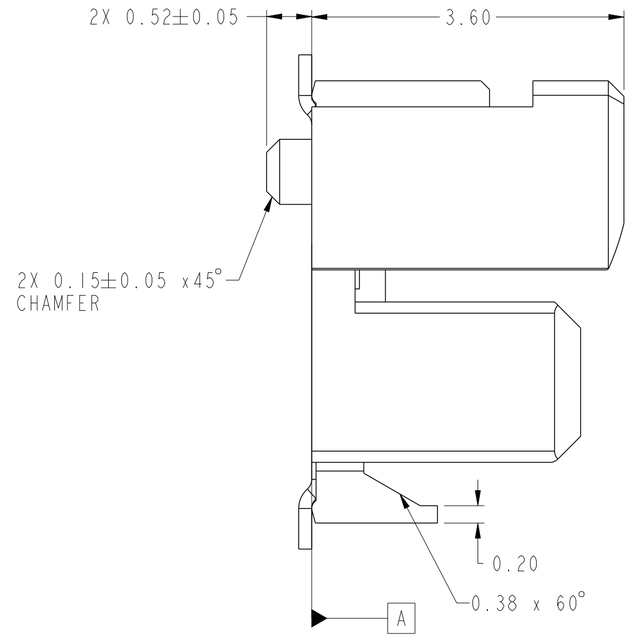


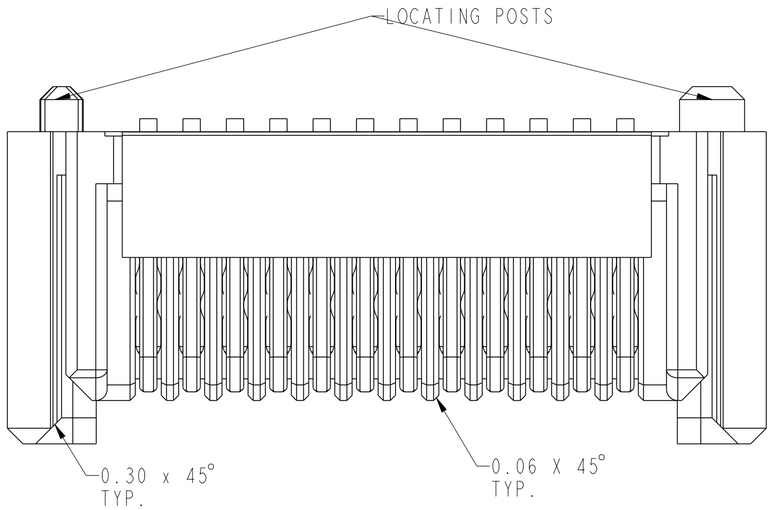


10115130-003LF DIMENSIONS ARE SHOWN
THE OTHER DIMENSIONS ARE THE SAME AS DIMENSIONS OF 10115130-001LF

10115130-004LF IS SAME AS 10115130-003LF EXCEPT WITHOUT LOCATING POSTS

| | | | | | | | |
|---|---|---|---|---|---|---|---|
| spec ref | --- | | | dr | Stu Stoner | 2011/03/09 | projection |
| tolerance std ASME Y14.5 | TOLERANCES UNLESS OTHERWISE SPECIFIED | | | eng | Sandar Soe | 2016/01/28 | mm |
| | | | | chr | - | - | |
| | | | | appr | Pei-Ming Zheng | 2016/02/04 | product family: MezzoStak |
| surface - | linear | 0.X | ±0.3 | title: HERMAPHRODITIC CONNECTOR, SPECIAL 24 POS, 0.5MM CTR, 4MM STACK HT | | | |
| | | 0.XX | ±0.10 | | | | |
| | | 0.XXX | ±0.05 | | | | |
| ASME Y14.5 | angular | 0° | ±2° | www.fci.com | cat. no. - | | Product - Customer Drw |

| size | scale | dwg no | rev |
|---|---|---|---|
| A2 | 20:1 | 10115130 | G |

ecn no: ELX-DG-23104-1
rel level: Released
sheet 4 of 9

Copyright FCI.

| PRODUCT NUMBER | LOCATING POSTS OPTION | ROUND FILLET ON HOUSING GUIDING FETURE |
|---|---|---|
| 10115130-005LF | WITH LOCATING POSTS | WITH |
| 10115130-005MLF (G) | | |
| 10115130-006LF | WITHOUT LOCATING POSTS | WITH |
| 10115130-006MLF (G) | | |

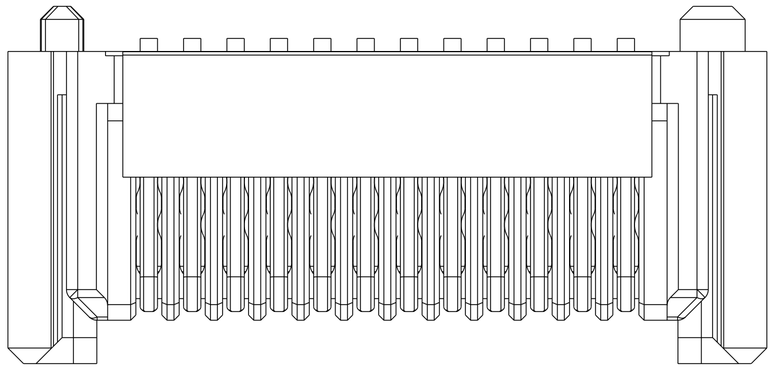

10115130-005LF/-005MLF DIMENSIONS ARE SAME AS DIMENSIONS OF 10115130-003LF EXCEPT BELOW DIMENSIONS SHOWN

10115130-006LF/-006MLF DIMENSIONS ARE SAME AS DIMENSIONS OF 10115130-004LF EXCEPT BELOW DIMENSIONS SHOWN

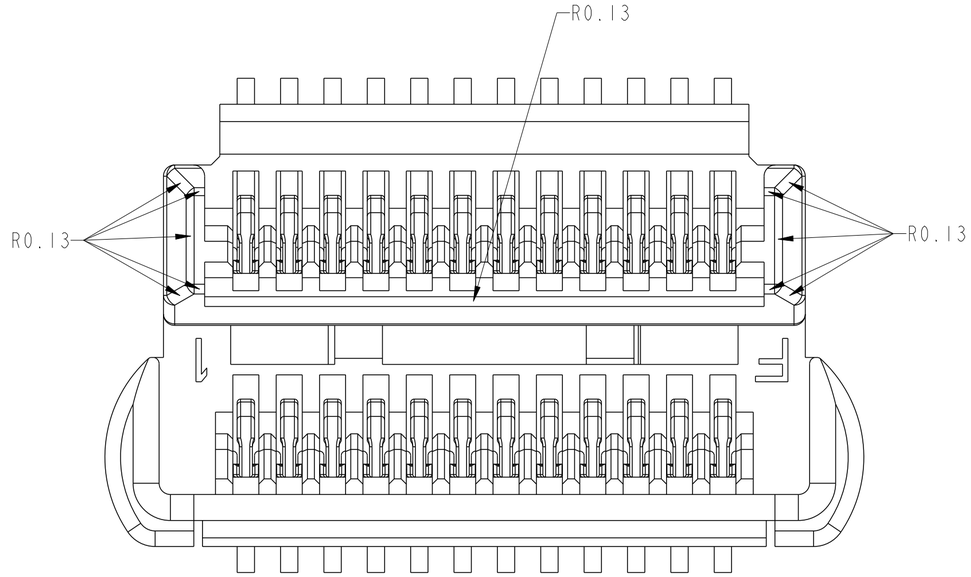


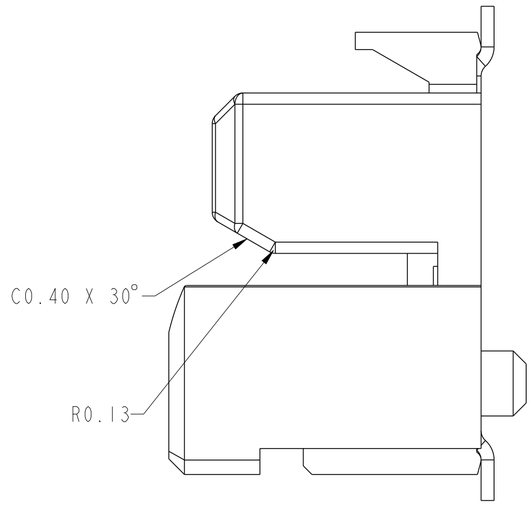


10115130-005LF/-005MLF SHOWN
WITHOUT PICK-UP CAP

| | | | | | | | |
|---|---|---|---|---|---|---|---|
| spec ref | --- | | | dr | Stu Stoner | 2011/03/09 | projection |
| tolerance std --- --- --- | TOLERANCES UNLESS OTHERWISE SPECIFIED | | | eng | Sandar Soe | 2016/01/28 | mm |
| | | | | chr | - | - | |
| | | | | appr | Pei-Ming Zheng | 2016/02/04 | product family: MezzoStak |
| surface - | linear | 0.X | ±0.3 | FCI | title: HERMAPHRODITIC CONNECTOR, SPECIAL 24 POS, 0.5MM CTR, 4MM STACK HT | | dwg no: 10115130 |
| | | 0.XX | ±0.10 | | | | |
| | | 0.XXX | ±0.05 | | | | |
| ASME Y14.5 | angular | 0° | ±2° | www.fci.com | cat. no. - | Product - Customer Drw | |

| | |
|---|---|
| size | A2 |
| scale | 20:1 |
| ecn no | ELX-DG-23104-1 |
| rel level | Released |
| rev | G |
| sheet | 5 of 9 |

Copyright FCI.

# 10115130-001LF

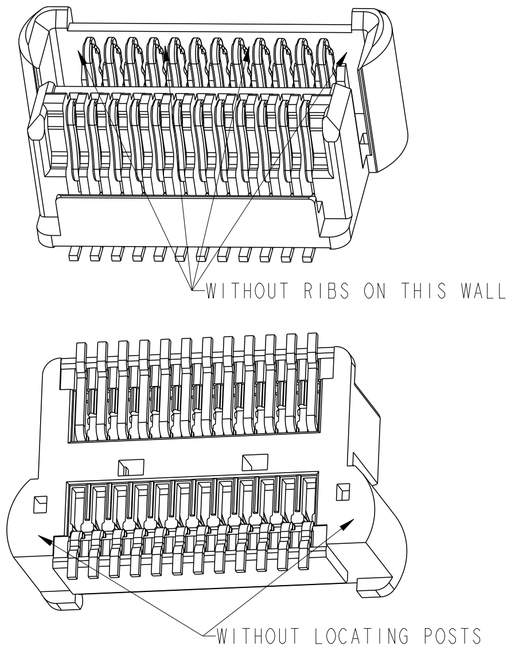


# 10115130-003LF

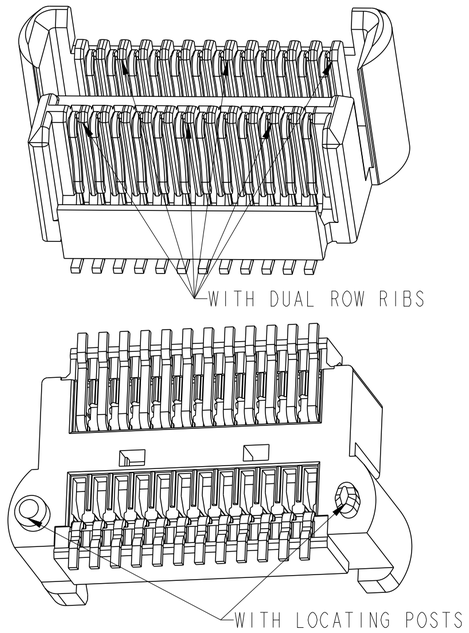


# 10115130-004LF

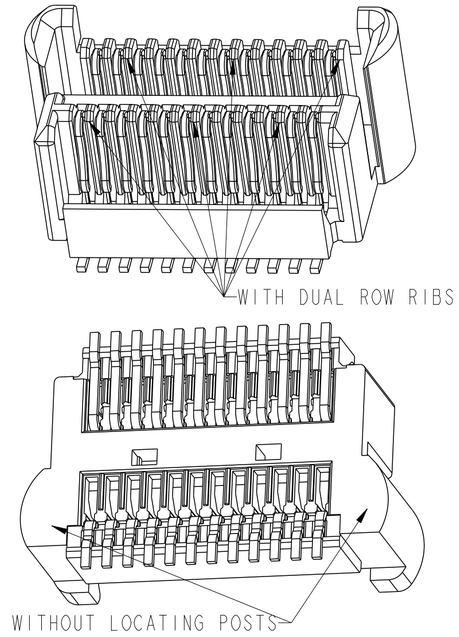


# 10115130-005LF/-005MLF G

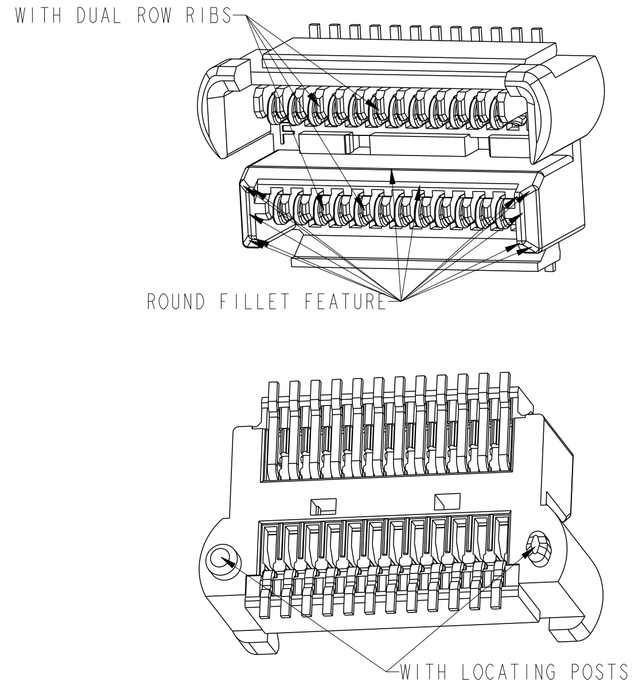


# 10115130-006LF/-006MLF G

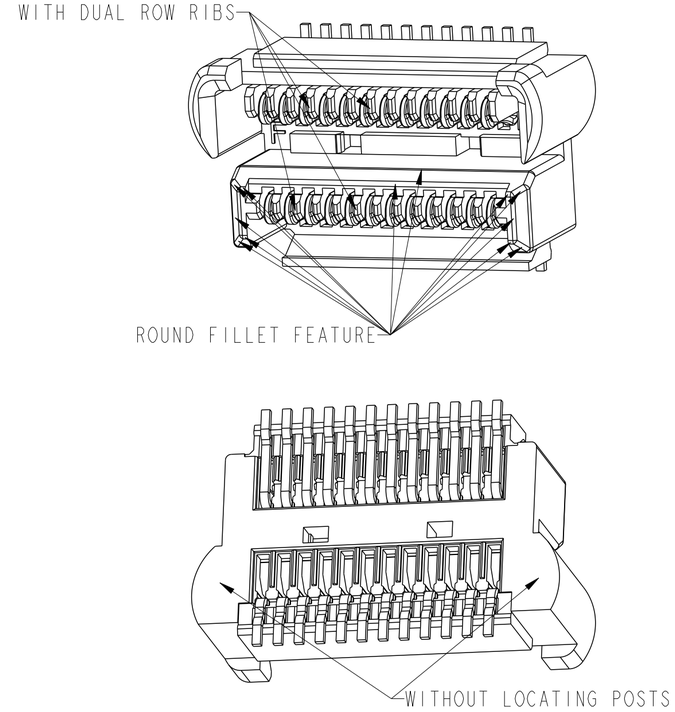


| | | | | | | | | |
|---|---|---|---|---|---|---|---|---|
| spec ref | --- | | | dr | Stu Stoner | 2011/03/09 | projection | mm | size A2 | scale 1:1 |
| tolerance std ASME Y14.5 | TOLERANCES UNLESS OTHERWISE SPECIFIED | | | eng | Sandar Soe | 2016/01/28 | | | ecn no | ELX-DG-23104-1 |
| | | | | chr | - | - | | | | |
| | | | | appr | Pei-Ming Zheng | 2016/02/04 | product family | MezzoStak | rel level | Released |
| surface - | linear | 0.X | ±0.3 | FCI | title | HERMAPHRODITIC CONNECTOR, SPECIAL 24 POS, 0.5MM CTR, 4MM STACK HT | dwg no | 10115130 | rev G |
| | | 0.XX | ±0.10 | | | | | | |
| | | 0.XXX | ±0.05 | | | | | | |
| ASME Y14.5 | angular | 0° | ±2° | www.fci.com | cat. no. | - | Product - Customer Drw | | sheet 6 of 9 |

Copyright FCI.

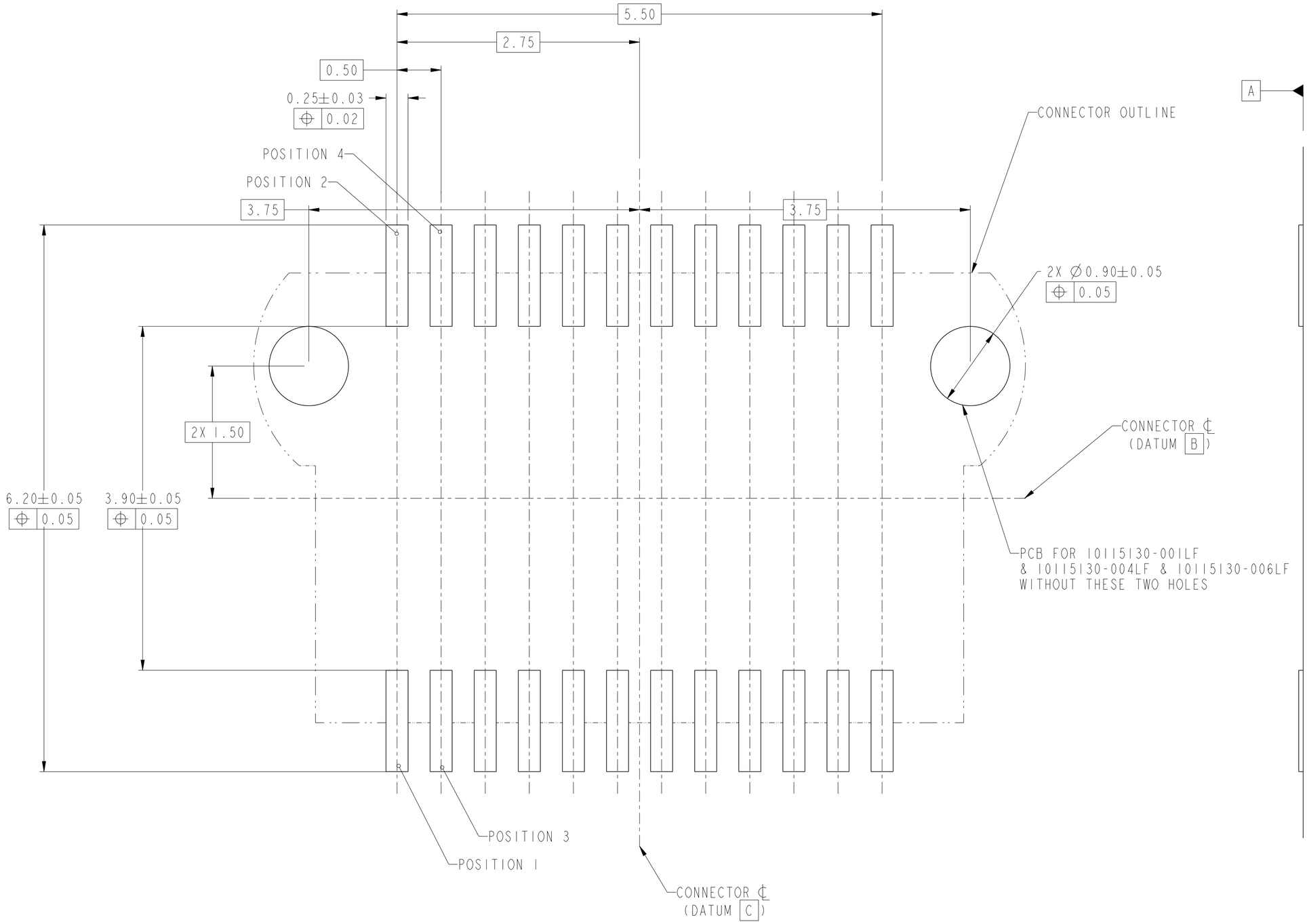


RECOMMENDED PCB LAYOUT
SEE NOTE 9 FOR STENCIL CREATION GUIDELINES

| | | | | | | | | | |
|---|---|---|---|---|---|---|---|---|---|
| spec ref | --- | | | dr | Stu Stoner | 2011/03/09 | projection | mm | size A2 / scale 10:1 |
| tolerance std ASME Y14.5 | TOLERANCES UNLESS OTHERWISE SPECIFIED | | | eng | Sandar Soe | 2016/01/28 | | | ecn no ELX-DG-23104-1 |
| | | | | chr | - | - | | | |
| | | | | appr | Pei-Ming Zheng | 2016/02/04 | product family | MezzoStak | rel level **Released** |
| surface - ASME Y14.5 | linear | 0.X | ±0.3 | FCI | title | HERMAPHRODITIC CONNECTOR, SPECIAL 24 POS, 0.5MM CTR, 4MM STACK HT | dwg no | 10115130 | rev G |
| | | 0.XX | ±0.10 | | | | | | |
| | | 0.XXX | ±0.05 | | | | | | |
| | angular | 0° | ±2° | www.fci.com | cat. no. | - | Product - Customer Drw | | sheet 7 of 9 |

Copyright FCI.

NOTES

1 - MATERIAL:
HOUSING - LCP, UL94-V0.
CONTACTS:
CONTACT PLATING:
SEPARABLE INTERFACE: PERFORMANCE-BASED PLATING, QUALIFIED TO MEET THE REQUIREMENTS OF FCI PRODUCT SPECIFICATION GS-12-577.
SOLDER TAILS: 0.10um Au.

2 - RECOMMENDED LEAD FREE SOLDER PASTE THICKNESS 150um.

3 - THE HOUSING WILL WITHSTAND EXPOSURE TO 260°C PEAK TEMPERATURE FOR 30 SECONDS IN A CONVECTION INFRA RED OR VAPOR PHASE REFLOW OVEN. SEE APPLICATION SPECIFICATION.

4 - THIS PRODUCT MEETS EUROPEAN UNION DIRECTIVES AND OTHER COUNTRY REGUGULATION AS DESCRIBED IN GS-22-008

5 - PACKAGING TAPE AND REEL PACKAGING SPECIFICATION GS-14-1320

6 - PRODUCT SPECIFICATION GS-12-577

7 - LEAD CO-PLANARITY TO BE 0.08MM MAX.

8 - THE TOE HEIGHT OF THE SOLDER TAIL SHALL BE MEASURED FROM THE LOWEST POINT OF THE 0.08 COPLANARITY PLANE. THIS MEASUREMENT SHALL NOT EXCEED A WINDOW OF 0.00 TO 0.10MM.

9 - REFER TO IPC 7525-A FOR STENCIL CREATION

10 - THE MAXIMUM TEMPERATURE RISE DUE TO A 1.0 AMPERE DC CURRENT FLOWING THROUGH ANY 2 ADJACENT CONTACTS AND 200 MILLIAMPERE DC CURRENT FLOWING THROUGH ALL REMAINING CONTACT SHALL NOT EXCEED 30°C WHEN TESTED AS PER FCI PRODUCT SPECIFICATION GS-12-577

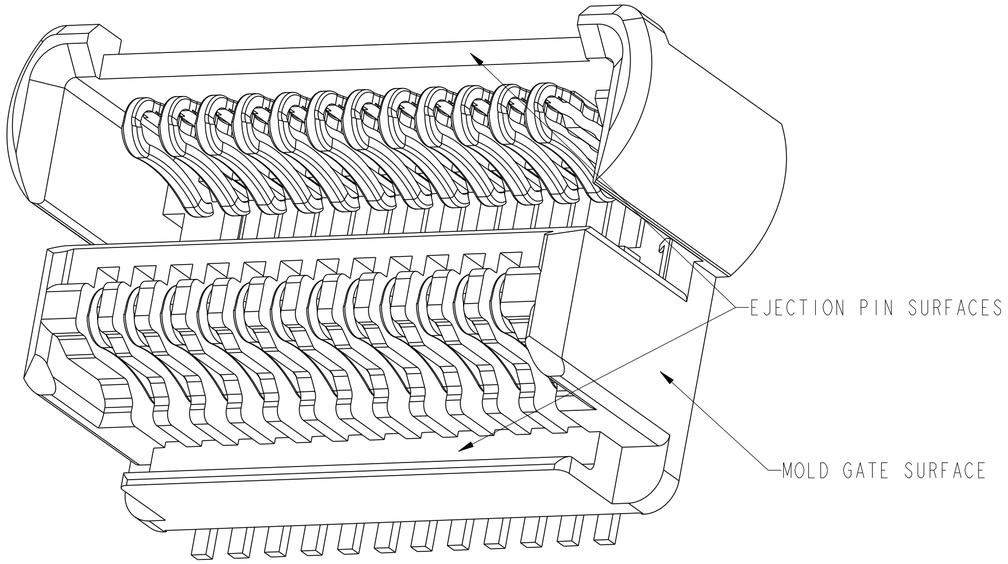


**10115130-001LF SHOWN WITHOUT STANDARD PICK-UP CAP**

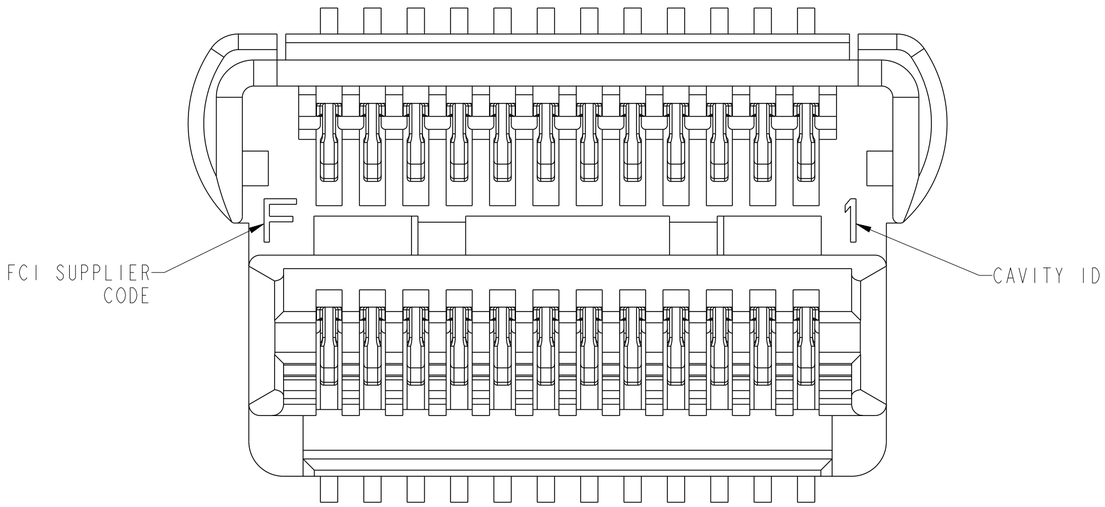


| | | | | | | | | | |
|---|---|---|---|---|---|---|---|---|---|
| spec ref | --- | | | dr | Stu Stoner | 2011/03/09 | projection | mm | size A2 / scale 20:1 |
| tolerance std ASME Y14.5 | TOLERANCES UNLESS OTHERWISE SPECIFIED | | | eng | Sandar Soe | 2016/01/28 | | | ecn no ELX-DG-23104-1 |
| | | | | chr | - | - | | | |
| | | | | appr | Pei-Ming Zheng | 2016/02/04 | product family | MezzoStak | rel level Released |
| surface - | linear | 0.X | ±0.3 | FCI | title | HERMAPHRODITIC CONNECTOR, SPECIAL 24 POS, 0.5MM CTR, 4MM STACK HT | dwg no | 10115130 | rev G |
| | | 0.XX | ±0.10 | | | | | | |
| | | 0.XXX | ±0.05 | | | | | | |
| ASME Y14.5 | angular | 0° | ±2° | www.fci.com | cat. no. | - | Product - Customer Drw | | sheet 8 of 9 |

Copyright FCI.

# PRODUCT NUMBER CODE; (MANUFACTURTING SITE: DONGGUAN)

10115130 - 0 0 * LF

RESERVED

LEAD FREE

1: SINGLE ROW RIBS
WITHOUT LOCATING POSTS
HOUSING COLOR, BLACK

3: DUAL ROW RIBS
WITH LOCATING POSTS
HOUSING COLOR, WHITE

4: DUAL ROW RIBS
WITHOUT LOCATING POSTS
HOUSING COLOR, WHITE

5: DUAL ROW RIBS
WITH LOCATING POSTS
HOUSING COLOR, WHITE
ROUND FILLET ON HOUSING GUIDING FETURE

6: DUAL ROW RIBS
WITHOUT LOCATING POSTS
HOUSING COLOR, WHITE
ROUND FILLET ON HOUSING GUIDING FETURE

# G PRODUCT NUMBER CODE; (MANUFACTURTING SITE: MALAYSIA)

10115130 - 0 0 * M LF

RESERVED

LEAD FREE

MANUFACTURING SITE

5: DUAL ROW RIBS
WITH LOCATING POSTS
HOUSING COLOR, WHITE
ROUND FILLET ON HOUSING GUIDING FETURE

6: DUAL ROW RIBS
WITHOUT LOCATING POSTS
HOUSING COLOR, WHITE
ROUND FILLET ON HOUSING GUIDING FETURE

| | | | | | | | |
|---|---|---|---|---|---|---|---|
| spec ref | --- | | | dr | Stu Stoner | 2011/03/09 | |
| tolerance std --- --- | TOLERANCES UNLESS OTHERWISE SPECIFIED | | | eng | Sandar Soe | 2016/01/28 | |
| | | | | chr | - | - | |
| | | | | appr | Pei-Ming Zheng | 2016/02/04 | |
| surface - | linear | 0.X | ±0.3 | FCI | title | HERMAPHRODITIC CONNECTOR,SPECIAL 24 POS, 0.5MM CTR, 4MM STACK HT | |
| | | 0.XX | ±0.10 | | | | |
| | | 0.XXX | ±0.05 | | | | |
| ASME Y14.5 | angular | 0° | ±2° | www.fci.com | cat. no. | - | Product - Customer Drw |

projection | mm | size A2 | scale 1:1
ecn no ELX-DG-23104-1
product family MezzoStak | rel level Released
dwg no 10115130 | rev G
sheet 9 of 9

Copyright FCI.