THIS DRAWING IS UNPUBLISHED. RELEASED FOR PUBLICATION -,- .
© COPYRIGHT - By - ALL RIGHTS RESERVED.

LOC	DIST
FT	0

REVISIONS

P	LTR	DESCRIPTION	DATE	DWN	APVD
	Y	REVISED PER ECO-12-012316	05JUL12	KH	MZ

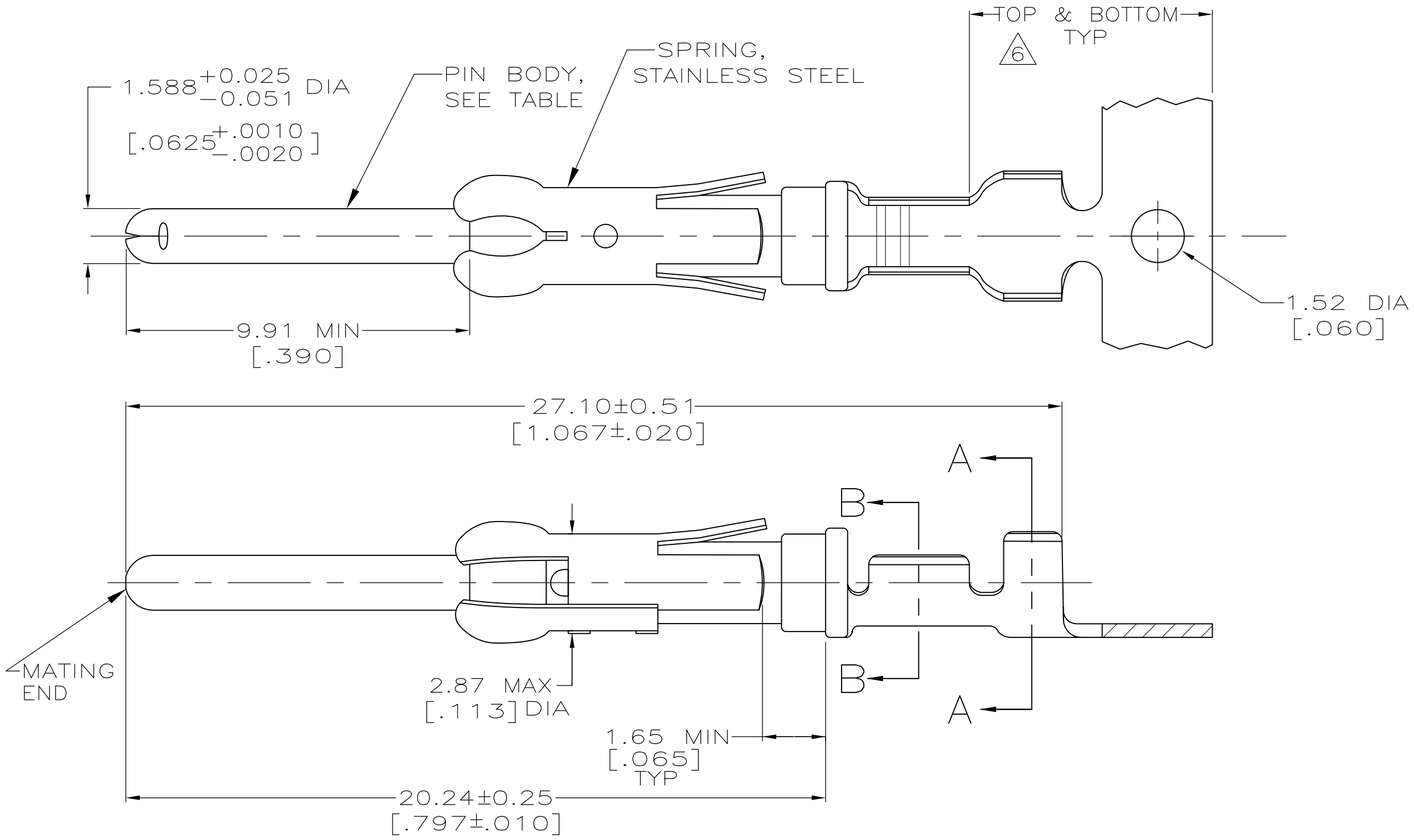

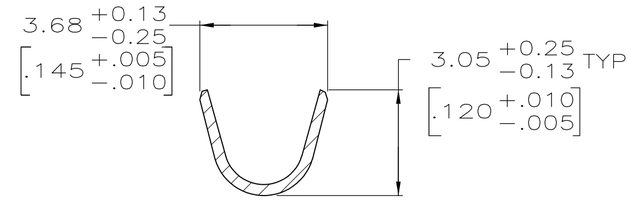

SECTION A–A

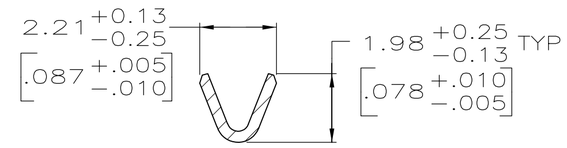

SECTION B–B

1. REVERSE REELED FOR MINI-APPLICATOR.
2. 0.76μm[.000030] MIN PRECIOUS METAL PLATE ON MATING END FOR A LENGTH OF 5.08 [.200] MIN WITH 1.27μm[.000050]MIN MATTE TIN PLATE IN WIRE CRIMP AREA, BOTH OVER 1.27μm [.000050] MIN NICKEL PLATE. CONFORMS TO THE REQUIREMENTS OF TE CONNECTIVITY PRODUCT SPEC 108-10042, BASED ON EIA/ECA-364-1000.01A (CONTROLLED ENVIRONMENT APPLICATIONS).
3. 0.76μm[.000030] MIN PRECIOUS METAL PLATE ON MATING END FOR A LENGTH OF 5.08 [.200] MIN WITH A UNIFORM GRADIENT TO 0.25μm [.000010] ON REMAINDER, OVER 1.27μm[.000050] MIN NICKEL PLATE. GOLD FLASH ALL OVER. CONFORMS TO THE REQUIREMENTS OF TE CONNECTIVITY PRODUCT SPEC 108-10042, BASED ON EIA/ECA-364-1000.01A (CONTROLLED ENVIRONMENT APPLICATIONS).
4. 0.38μm [.000015] MIN GOLD PER MIL-G-45204 ON MATING END FOR A LENGTH OF 5.08 [.200] MIN WITH 1.27μm[.000050]MIN MATTE TIN PLATE IN WIRE CRIMP AREA, BOTH OVER 1.27μm [.000050] MIN NICKEL PER QQ-N-290.
5. 1.27μm [.000050] MIN GOLD PER MIL-G-45204 ON MATING END FOR A LENGTH OF 5.08 [.200] MIN WITH GOLD FLASH ON THE REMAINDER OVER 3.81μm [.000150] MIN NICKEL PER QQ-N-290.
6. GOLD PLATING NEED NOT APPEAR IN THIS AREA.
7. 1.27μm [.000050] MIN TIN-LEAD PER MIL-T-10727 OVER 1.27μm [.000050] MIN NICKEL PER QQ-N-290.
8. WIRE RANGE 24-20 AWG.
9. INSULATION RANGE 2.03[.080]-2.54[.100] DIA.
10. 0.38μm [.000015] MIN GOLD PER MIL-G-45204 ON MATING END FOR A LENGTH OF 5.08 [.200] MIN, 1.27μm [.000050] MIN TIN-LEAD PER MIL-T-10727 FOR A LENGTH OF 5.69 [.224] MIN ON OPPOSITE END, BOTH OVER 1.27μm [.000050] MIN NICKEL PER QQ-N-290 ON ENTIRE CONTACT.
11. 1.27μm [.000050] MIN TIN PER MIL-T-10727 OVER 1.27μm [.000050] MIN NICKEL PER QQ-N-290.
12. OBSOLETE PARTS: OBSOLETE CIS STREAMLINING PER D.RENAUD/D.SINISI

12 OBSOLETE	STANDARD	11	BRASS	1-66400-0	1-66332-5
	1	11	BRASS	1-66400-0	1-66332-4
12 OBSOLETE	1	2	PHOSPHOR BRONZE	–	1-66332-3
OBSOLETE	1	10	BRASS	66400-5	1-66332-2
OBSOLETE	1	5	BRASS	–	1-66332-1
	1	2	BRASS	66400-4	66332-8
	1	4	BRASS	66400-3	66332-7
	1	3	BRASS	66400-2	66332-6
	1	7	BRASS	66400-1	66332-5
	STANDARD	2	BRASS	66400-4	66332-4
	STANDARD	4	BRASS	66400-3	66332-3
	STANDARD	7	BRASS	66400-1	66332-1
	REELING	PIN BODY FINISH	PIN BODY	LOOSE PIECE REF	PART NO

THIS DRAWING IS A CONTROLLED DOCUMENT.

DIMENSIONS: mm [INCHES]

TOLERANCES UNLESS OTHERWISE SPECIFIED:
0 PLC ± –
1 PLC ± –
2 PLC ± 0.13[.005]
3 PLC ± –
4 PLC ± –
ANGLES ± –

MATERIAL: SEE CALLOUTS
FINISH: SEE TABLE

DWN R.SHIREY 7-18-91
CHK R.STONE 8-15-91
APVD J.WESTMAN 8-19-91
PRODUCT SPEC —
APPLICATION SPEC —
WEIGHT —

TE Connectivity

NAME: CONTACT, PIN, .062 , TYPE III+ –

SIZE A2 | CAGE CODE 00779 | DRAWING NO C-66332 | RESTRICTED TO —

CUSTOMER DRAWING | SCALE 8:1 | SHEET 1 OF 1 | REV Y

66332

1471-9 (3/11)