PART NAME	NON-METALLIC ENCLOSURE (STYLE D)	PART No.	NBD-10442 & NBD-10462 & NBD-15442

MATERIAL:

INDOOR VERSION

SOLID BODY & COVER ____ ABS/PC BLENDED PLASTIC
UL94-5VB FLAMMABILITY RATING

CLEAR COVER _____ POLYCARBONATE PLASTIC
UL94V-0 FLAMMABILITY RATING
UV STABILIZED

OUTDOOR VERSION

SOLID BODY & COVER ____ PBT/PC BLENDED PLASTIC
UL94-5VA FLAMMABILITY RATING
UV STABILIZED

FINISH:

BODY _____ LIGHT GRAY
COVER _____ LIGHT GRAY OR CLEAR

COVER INCLUDES GRAY POLYURETHANE GASKET.

NOTE: COVER ATTACHES WITH PHILLIPS DRIVE NON-METALLIC SCREWS. (NOT SHOWN)

INDUSTRY STANDARDS:

INDOOR VERSION
UL508 TYPE 1, 2, 4, 4X INDOOR, 12 & 13
NEMA TYPE 1, 2, 4, 4X, 12 & 13
IEC529-IP65

OUTDOOR VERSION
UL508 TYPE 1, 2, 4, 4X, 12 & 13
NEMA TYPE 1, 2, 4, 4X, 12 & 13
IEC529-IP65

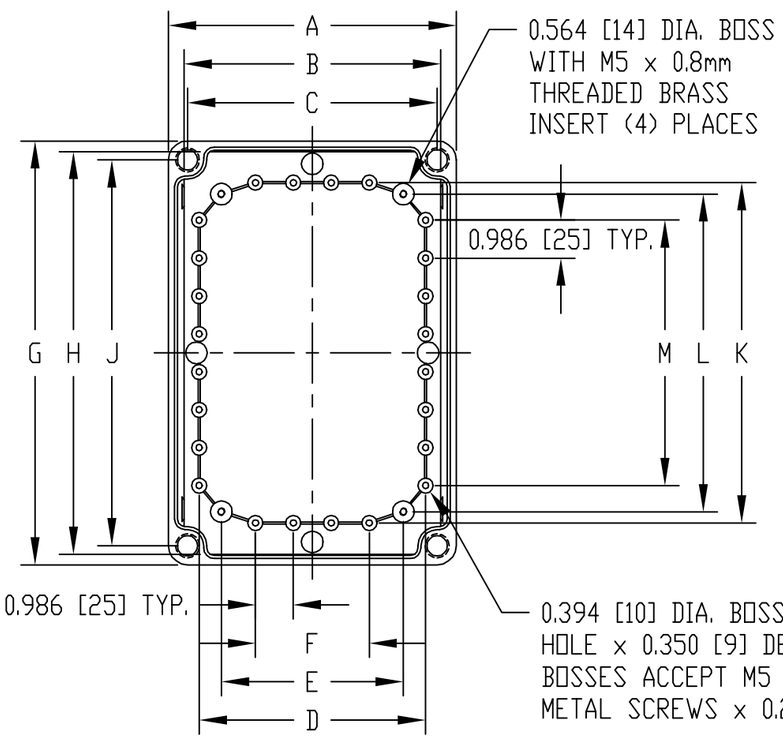

VIEW LESS COVER

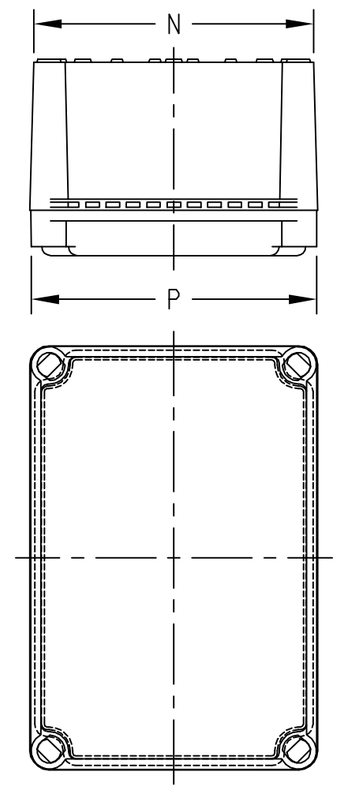

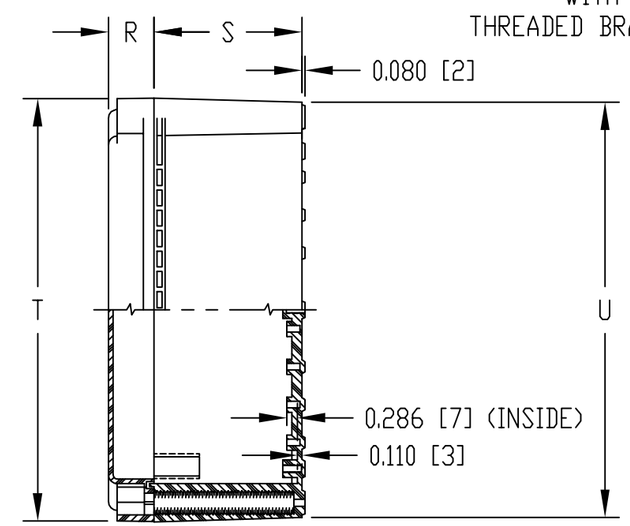

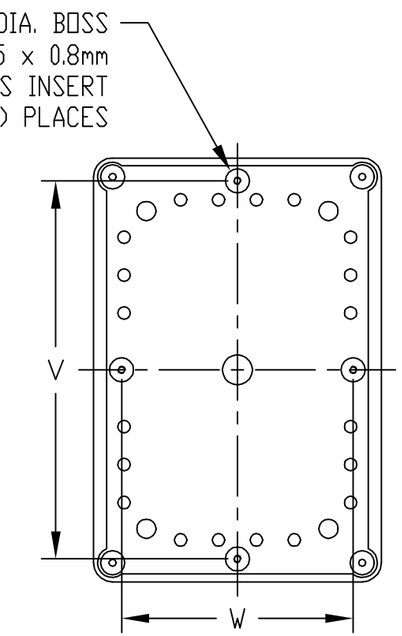

AIR AND MOISTURE VENTS, STAINLESS STEEL LOCKING HASP, PANEL MOUNTING RAILS, GALVANIZED STEEL INNER PANEL AND STAINLESS STEEL WALL MOUNTING BRACKETS ARE NOT INCLUDED, BUT CAN BE PURCHASED SEPARATELY.

DIMENSIONS = INCHES [MILLIMETERS]

NOTE: ALL DIMENSIONS HAVE ±0.039 [±1] TOLERANCE UNLESS OTHERWISE SPECIFIED

INDOOR VERSION PART NO.		OUTDOOR VERSION PART NO.	DIMENSIONS																			
SOLID COVER	CLEAR COVER	SOLID COVER	A	B	C	D	E	F	G	H	J	K	L	M	N	P	R	S	T	U	V	W
NBD-10442	NBD-10462	NBD-15442	7.485	6.663	6.496	5.890	4.736	2.958	11.024	10.474	10.039	8.850	8.263	6.902	7.280	7.420	1.181	3.850	10.984	10.805	9.838	6.027
			[190]	[169]	[165]	[150]	[120]	[75]	[280]	[266]	[255]	[225]	[210]	[175]	[185]	[188]	[30]	[98]	[279]	[274]	[250]	[153]

Revised 26JUN07