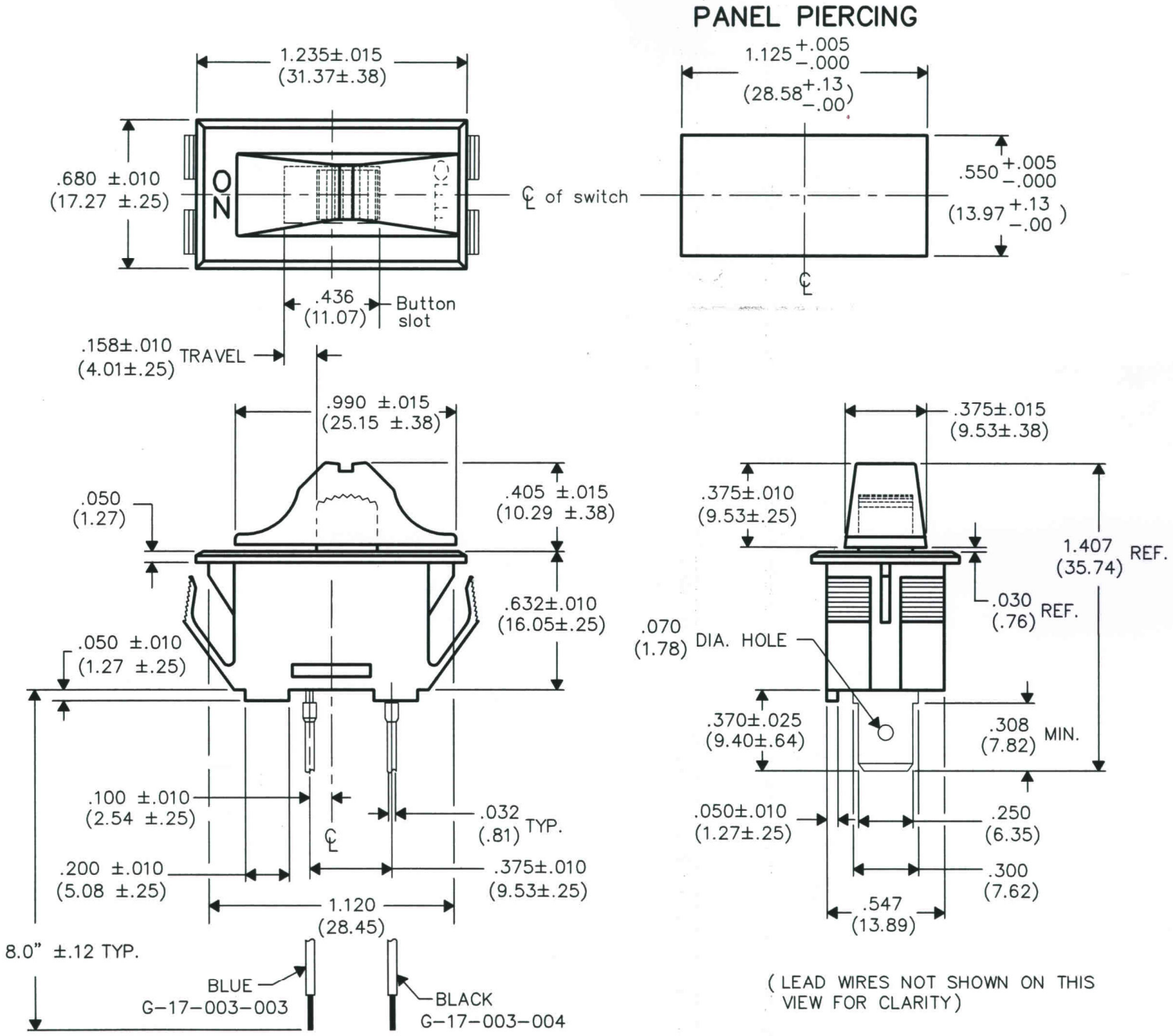
PANEL PIERCING
1.235±.015
(31.37±.38)
.680 ±.010
(17.27 ±.25)
ON
OFF
℄ of switch
.436
(11.07)
Button slot
.158±.010
(4.01±.25)
TRAVEL
1.125 +.005 −.000
(28.58 +.13 −.00)
.550 +.005 −.000
(13.97 +.13 −.00)
.990 ±.015
(25.15 ±.38)
.050
(1.27)
.405 ±.015
(10.29 ±.38)
.632±.010
(16.05±.25)
.050 ±.010
(1.27 ±.25)
.100 ±.010
(2.54 ±.25)
.032
(.81)
TYP.
.200 ±.010
(5.08 ±.25)
.375±.010
(9.53±.25)
1.120
(28.45)
8.0" ±.12 TYP.
BLUE
G-17-003-003
BLACK
G-17-003-004
.375±.015
(9.53±.38)
.375±.010
(9.53±.25)
1.407
(35.74)
REF.
.030
(.76)
REF.
.070
(1.78)
DIA. HOLE
.370±.025
(9.40±.64)
.308
(7.82)
MIN.
.050±.010
(1.27±.25)
.250
(6.35)
.300
(7.62)
.547
(13.89)
(LEAD WIRES NOT SHOWN ON THIS VIEW FOR CLARITY)

G-2011-0042