THIS DRAWING IS UNPUBLISHED. RELEASED FOR PUBLICATION - , - .
© COPYRIGHT - By - ALL RIGHTS RESERVED.

LOC	DIST
CM	54

REVISIONS

P	LTR	DESCRIPTION	DATE	DWN	APVD
	D	REVISED PER ECO-12-016930	05OCT12	KH	SM
	D1	ECR-12-016748	30AUG13	M.T	D.Z

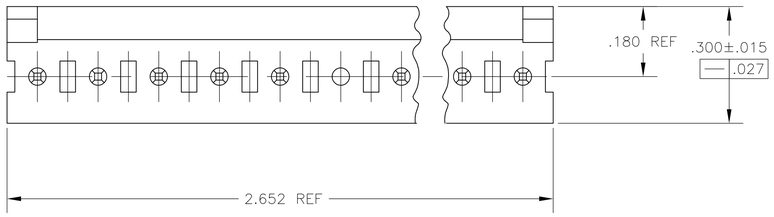

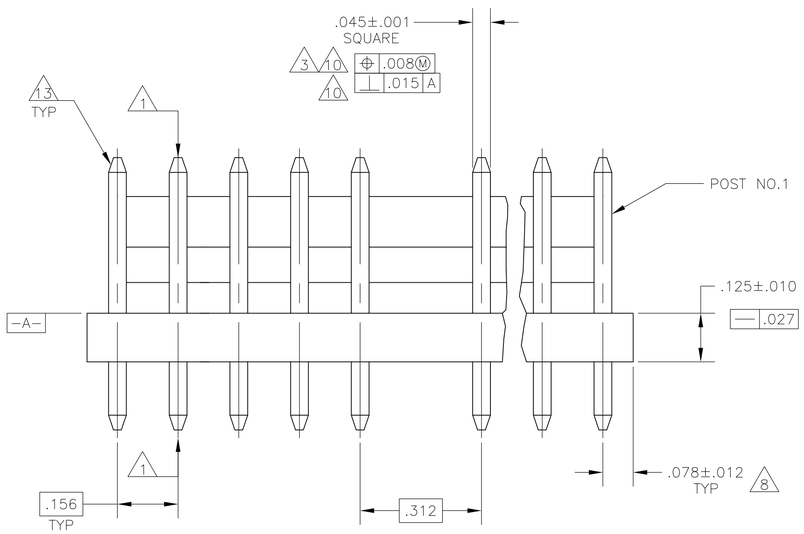

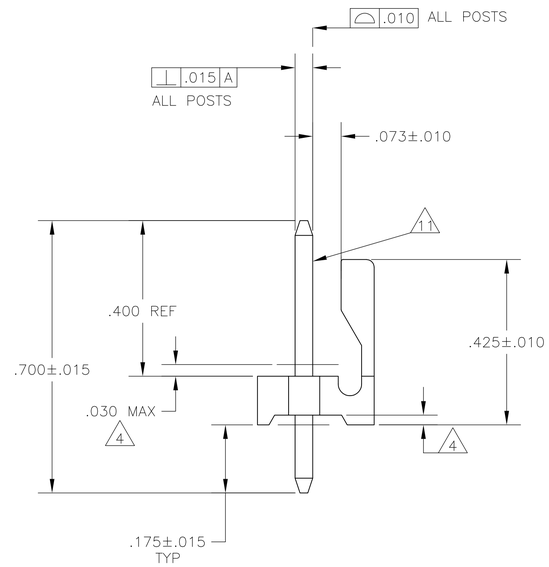

1. POST TO WITHSTAND 13 NEWTONS (3LBS.) MIN. AXIAL FORCE IN BOTH DIRECTIONS SHOWN WITHOUT DISLODGING.
2. TOLERANCES APPLY TO SOLDER SIDE OF BOARD.
3. MEASURED AT SURFACE -A-
4. PLASTIC FLASH PERMITTED IN THIS AREA.
5. PARTS COMPLY WITH AMP SOLDERABILITY SPEC. NO. 109-11-2.
6. ONE HOLE MAY BE UNDERSIZED (.051/.046 DIA.) FOR ASSEMBLY RETENTION DURING WAVE SOLDERING.
7. MATERIAL: HEADER-THERMOPLASTIC POLYESTER GLASS-FILLED 94V-0(NATURAL) POST-COPPER ALLOY (TIN PLATED)
8. COORDINATE DIMENSION APPLIES FROM CENTER OF ACTUAL FEATURE.
9. PLASTIC BURRS CAUSED BY CUT-OFF TOOLING ARE PERMITTED WITHIN THE MAXIMUM TOLERANCE ENVELOPE.
10. POST TO BE MEASURED WHEN STRIP IS HELD FLAT.
11. POST MUST WITHSTAND TWO 90° BENDS AGAINST EXTRUSION WITHOUT BREAKING.
12. DIMENSION SHOULD BE .175 MIN WHEN MATING WITH A MTA 156 CONNECTOR ASSEMBLY OR A SL-156 CONNECTOR ASSEMBLY.
13. PIN BURR OF .005 MAX. VERTICAL AND .003 MAX. HORIZONTAL PERMITTED AT POST TIPS ON BOTH ENDS.

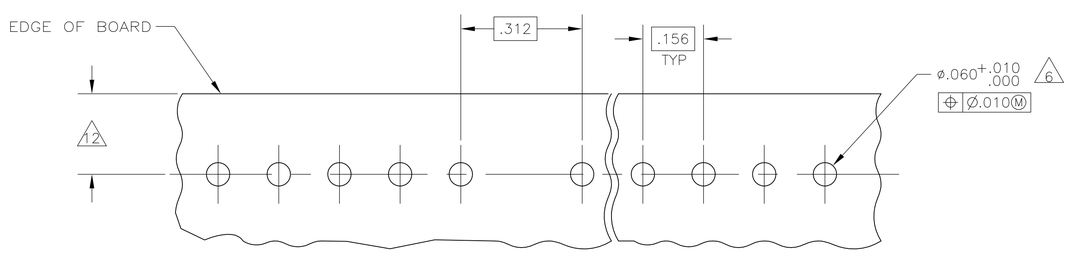

D1 RECOMMENDED MOUNTING HOLE PATTERN FOR .109±0.016 THICK P.C. BOARD 2

IN	MM	IN	MM
.060	1.52		
.051	1.30	2.652	67.36
.046	1.17	.750	19.05
.045	1.14	.450	11.43
.030	0.76	.425	10.80
.027	0.69	.312	7.92
.015	0.38	.300	7.62
.012	0.30	.180	4.57
.010	0.25	.175	4.45
.008	0.20	.156	3.96
.005	0.13	.125	3.18
.003	0.08	.078	1.98
.001	0.03	.073	1.85
.000	0.00	.063	1.60

CONVERSION TABLE

~~644873-1~~ SHOWN

	POST NUMBER OMITTED	PART NUMBER
	14	644873-3
	11	644873-2
OBSOLETE	12	~~644873-1~~

THIS DRAWING IS A CONTROLLED DOCUMENT.

DIMENSIONS: INCHES

TOLERANCES UNLESS OTHERWISE SPECIFIED:
0 PLC ± -
1 PLC ± -
2 PLC ± .005
3 PLC ± -
4 PLC ± -
ANGLES ± 0°30'

MATERIAL 7 FINISH 7

DWN R. VESTAL 25MAY95
CHK R. SWING 25MAY95
APVD D. CLARK 25MAY95
PRODUCT SPEC —
APPLICATION SPEC —
WEIGHT —

TE Connectivity

NAME MTA-156 HEADER ASSEMBLY, FRICTION LOCK, STRAIGHT, .045 ROUND POST, TIN PLATED, 17 POSITION, OMITTED POST

SIZE	CAGE CODE	DRAWING NO	RESTRICTED TO
A1	00779	C-644873	—

CUSTOMER DRAWING SCALE 5:1 SHEET 1 OF 1 REV D1

4805 (3/11)