THIS DRAWING IS UNPUBLISHED. RELEASED FOR PUBLICATION 1997
© COPYRIGHT 1997 - ALL RIGHTS RESERVED.

LOC	DIST
A1	-

REVISIONS

P	LTR	DESCRIPTION	DATE	DWN	APVD
	B3	REWORKED PER ECR 09-026789	08DEC2009	MH	BR
	B4	ECR-11-002636	05APR2011	SR	AR

PN 1-1,2-1,3-1,4-1,5-1,1-2,2-2,3-2
4-2,5-2,6-1,~~4-3~~,1-8,2-8,3-8,4-8,5-8,
4-9,2-9,3-9,4-9 & 5-9

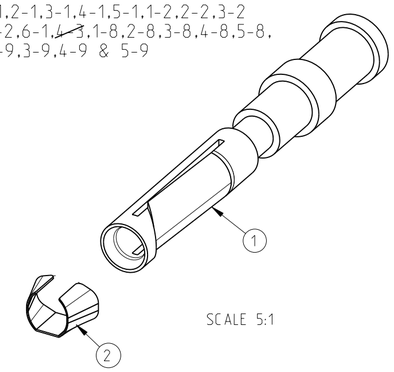

SCALE 5:1

NOTES

1. MATERIAL SEE TABLE
2. SURFACE SEE TABLE
3. ASSEMBLY WEIGHT SEE TABLE
4. PACKAGING: 50 PIECES IN POLY-BAG 0-1243085-8
5. PACKAGING: 500 PIECES IN POLY-BAG 0-1243085-8
6. PACKAGING: 10 PIECES IN POLY-BAG 0-1243085-8
7. CROSS-SECTION MARKING

PN 1-1,2-1,3-1,4-1,5-1,1-2,2-2,3-2
4-2,5-2,6-1,~~4-3~~,1-8,2-8,3-8,4-8,5-8,
4-9,2-9,3-9,4-9 & 5-9

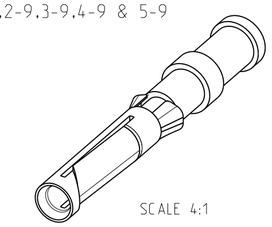

SCALE 4:1

PN 1-1,2-1,3-1,4-1,5-1,1-2,2-2,3-2
4-2,5-2,6-1,~~4-3~~,1-8,2-8,3-8,4-8,5-8,
4-9,2-9,3-9,4-9 & 5-9

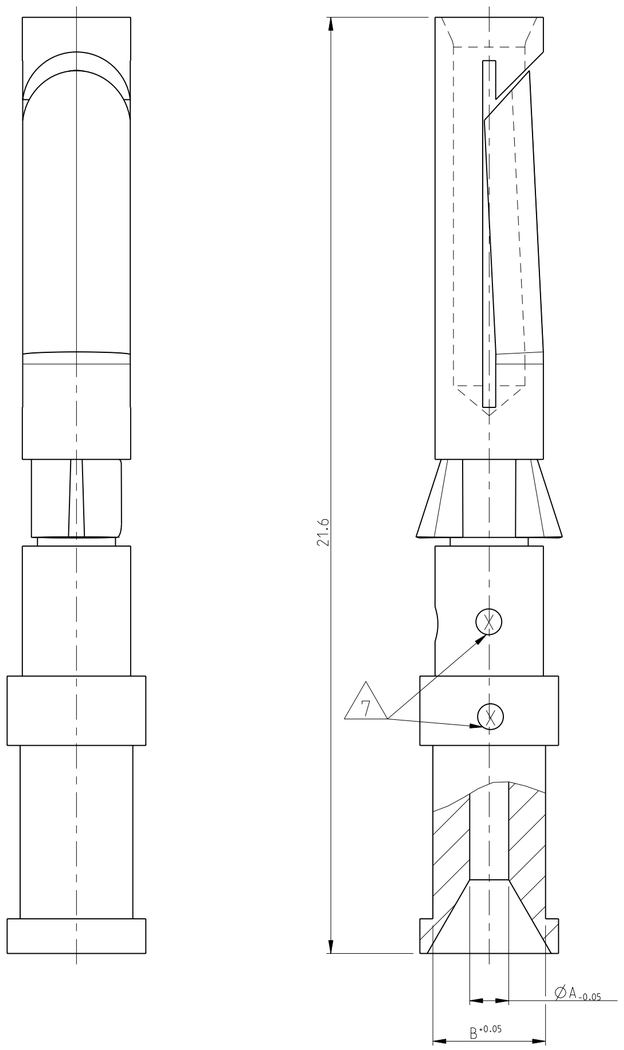

4-3	6-1	1-4	1-3	5-2	4-2	3-2	2-2	1-2	5-1	4-1	3-1	2-1	1-1	DESCRIPTION	WEIGHT IN (Kg)	MATERIAL	SURFACE	ØA	ØB	CROSS SECTION MARKING	POS
				5	5	5	5	5	5	5	5	5	5								
				5-9	4-9	3-9	2-9	1-9	5-8	4-8	3-8	2-8	1-8								
OBSOLETE															3	1	2			7	
1	1	1	1	1	1	1	1	1	1	1	1	1	1	Catch Spring		Stainless Steel					2
1														Socket Contact 1.5 mm²	0.00062	Brass	Ag/Ni	1.8	3.0	4	1
	1													Socket Contact 4.0 mm²	0.00059	Brass	Ag/Ni	2.4	3.2	6	
				1										Socket Contact 2.5 mm²	0.00067	Brass	Au	2.2	3.2	5	
					1									Socket Contact 1.5 mm²	0.00067	Brass	Au	1.8	3.0	4	
						1								Socket Contact 0.75-10 mm²	0.00063	Brass	Au	1.45	2.6	3	
							1							SocketContact 0.5 mm²	0.00062	Brass	Au	1.1	2.6	2	
								1						Socket Contact 0.14-0.37 mm²	0.00061	Brass	Au	0.9	2.6	1	
									1					Socket Contact 2.5 mm²	0.00065	Brass	Ag/Cu	2.2	3.2	5	
										1				Socket Contact 1.5 mm²	0.00067	Brass	Ag/Cu	1.8	3.0	4	
											1			Socket Contact 0.75-10 mm²	0.00063	Brass	Ag/Cu	1.45	2.6	3	
												1		Socket Contact 0.5 mm²	0.00062	Brass	Ag/Cu	1.1	2.6	2	
OBSOLETE		1												~~Socket Contact 0.14-0.37 mm²~~	~~0.00061~~	~~Brass~~		~~0-9~~	~~2.6~~	~~1~~	
OBSOLETE			1											~~Socket Contact 0.14-0.37 mm²~~	~~0.00065~~	~~Fe~~	~~Au~~	~~0-9~~	~~2.6~~	~~1~~	
													1	Socket Contact 0.14-0.37 mm²	0.00067	Brass	Ag/Cu	0-9	2.6	1	
4	4	6	6	4	4	4	4	4	4	4	4	4	4								
~~HND-C-Bu.Ag/Ni.1.5 mm²~~	HND-C-Bu.Ag/Ni.4.0 mm²	~~HN.D-C-Bu.CuNi.0.14 -0.37 mm²~~	~~HN.D-C-Bu.Fe.Au.0.14 -0.37 mm²~~	HN.D-C-Bu.Au.2.5 mm²	HN.D-C-Bu.Au.1.5 mm²	HN.D-C-Bu.Au.0.75-1.00 mm²	HN.D-C-Bu.Au.0.5 mm²	HN.D-C-Bu.Au.0.14 -0.37 mm²	HN.D-C-Bu.Ag.2.5 mm²	HN.D-C-Bu.Ag.1.5 mm²	HN.D-C-Bu.Ag.0.75-1.00 mm²	HN.D-C-Bu.Ag.0.5 mm²	HN.D-C-Bu.Ag.0.14 -0.37 mm²								

THIS DRAWING IS A CONTROLLED DOCUMENT.

DIMENSIONS: mm

TOLERANCES UNLESS OTHERWISE SPECIFIED: ISO 8015, DIN ISO 2768 mH-E, DIN 16901-120
0 PLC ±
1 PLC ±
2 PLC ±
3 PLC ±
4 PLC ±
ANGLES ±1°

MATERIAL 1 -

FINISH 2 -

DWN	Braun	23.07.1997
CHK	Schnurpfeil	23.07.1997
APVD	-	
PRODUCT SPEC	108-74018	
APPLICATION SPEC	114-74015	
WEIGHT	-	

TE Connectivity

NAME: SOCKET CONTACT SERIES HN.D -

SIZE	CAGE CODE	DRAWING NO	RESTRICTED TO
A2	00779	C-1105051	-

CUSTOMER DRAWING | SCALE 10:1 | SHEET 1 OF 1 | REV B4

1471-9 (3/11)

Pro/ENGINEER DRAWING