M1201-W

15 Amp, 120/277 Volt, Single-Pole AC Toggle Switch, Extra Heavy Duty Specification Grade, Self Grounding, Lev-Lok Modular – WHITE
Mating Lev-Lok Wiring Module Required for Use

Color : White

UPC Code : 078477494110

Country Of Origin : Mexico

Available Colors :

Brown, Gray, Ivory, Red

Technical Information

AC Horsepower Ratings

HP Rating : 1/2HP-120V 2HP-240V

Electrical Specifications

Amperage : 15 A

Dielectric Voltage : Withstands 1500V for 1 minute

Endurance : 50,000 cycles minimum

Grounding : Self-Grounding

Overload UL20 Test : 100 cycles of OL at 4.8 times rated current

Temperature Rise : Maximum 30 degrees C rise

Voltage : 120/277 VAC

Environmental Specifications

Flammability : Rated V-2 per UL94

Operating Temperature : -40°C to 65°C

Material Specifications

Base Material : PBT

Color : White

Contact Material : Silver Alloy

Cover Material : Nylon

Dome : Nylon

Ground Clips : Brass

Strap Material : Galvanized Steel

Toggle : Polycarbonate

Mechanical Specifications

Product ID : Markings are permanently marked on device

Termination : Modular

Product Features

Brand : Lev-Lok

Color : White

Device Type : Toggle Switch

Function : Single-Pole

Grade : Extra Heavy-Duty Industrial Specification Grade

Standards and Certifications

ANSI : C-73

NEMA : WD-1 & WD-6

NOM : 057

RoHS : Compliant

Warranty : 10-Year Limited

cULus : File # E7458

Patents*

CA2655707

CA2667092

US7357652

US7666010

US8096818

*This list is provided for patent marking purposes only. A good faith effort is made to maintain the accuracy and completeness of this list. No legal inference should be drawn from the omission of a patent from this list.

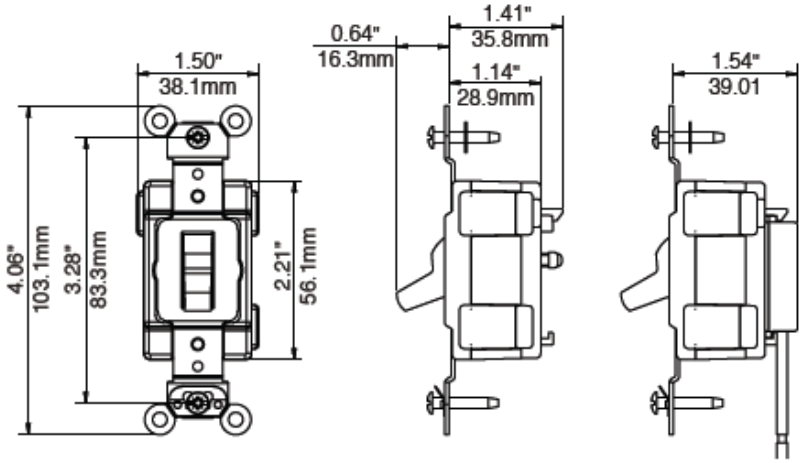

Wiring Diagram
Single Pole

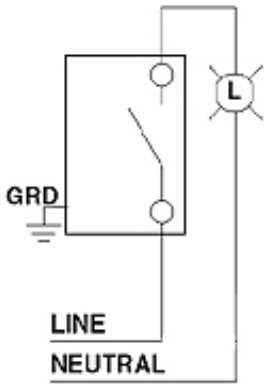

SPECIFICATION SUBMITTAL

JOB NAME:	CATALOG NUMBERS:	
JOB NUMBER:		

Leviton Manufacturing Co., Inc.
201 North Service Road, Melville, NY 11747
Telephone: +1-800-323-8920 · FAX: +1-800-832-9538 · Tech Line (8:30AM-7:30PM E.S.T. Monday-Friday): +1-800-824-3005

Leviton Manufacturing of Canada, Ltd.
165 Hymus Boulevard, Pointe Claire, Quebec H9R 1E9 · Telephone: +1-800-469-7890 · FAX: +1-800-824-3005 · www.leviton.com/canada

Leviton S. de R.L. de C.V.
Lago Tana 43, Mexico DF, Mexico CP 11290 · Tel.: (+52)55-5082-1040 · FAX: (+52)5386-1797 · www.leviton.com.mx

ISO 9001 REGISTERED Quality Manufacturer

Visit our Website at: www.leviton.com
© 2018 Leviton Manufacturing Co., Inc. All Rights Reserved. Subject to change without notice.

Leviton has a global presence.
If you would like to know where your local Leviton office is located please go to:
www.leviton.com/international/contacts/