THIS DRAWING IS UNPUBLISHED
UNPUBLISHED DRAWING
(C) COPYRIGHT 2002 BY TYCO ELECTRONICS CORPORATION. ALL RIGHTS RESERVED
(FOR USE WITHIN TYCO ELECTRONICS CORPORATION ONLY)

RELEASED FOR PUBLICATION - 2002
FREIGABE VERÖFFENTLICHUNG
RATED WITH FIGURE 20

CODINGS
Kodierungen
2:1

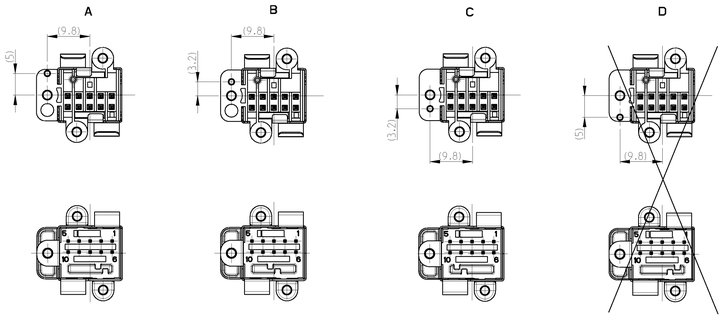

A-A

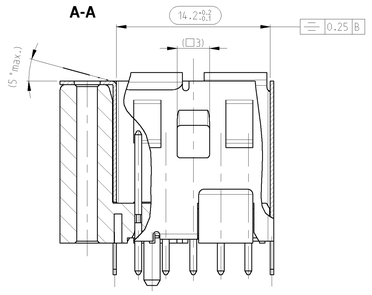

ASSEMBLY PITCH
Einbau-Raster
2:1

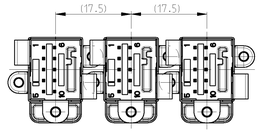

LOC	DIST
A1	–

PROJECT NO EGATN0580

REVISIONS
ÄNDERUNGEN

F	LTR	DESCRIPTION BESCHREIBUNG	DATE	DWN	APVD
	A	NEW DRAWING	03JUN2005	GRO	JW 0
	A1	TOLERANCE. DIM. 0.2 +0.2/-0.15 was 0.2 ±0.2	22NOV2005	DME	-
	A2	ECR-06-002750	09FEB2006	KS	HS
	A3	ECR-06-012357	23MAY2006	KS	HS
	B	ECR-06-013724	07JUN2006	DME	-
	B1	ECR-07-002367	30JAN2007	DME	
	B2	ECR-07-002884	06FEB2007	DME	

VERSION 1
Variante 1

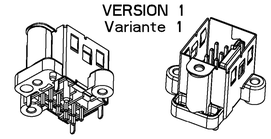

VERSION 2
Variante 2

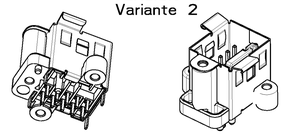

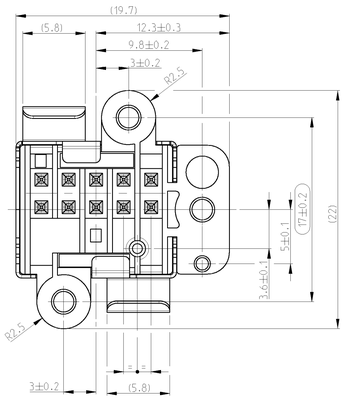

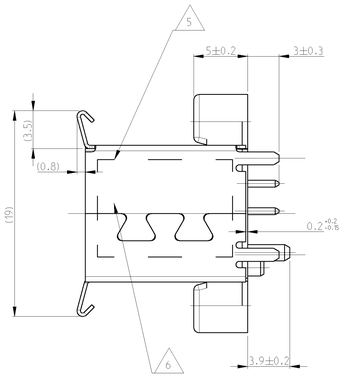

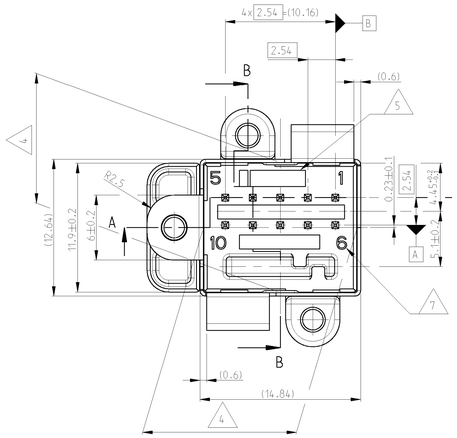

B-B

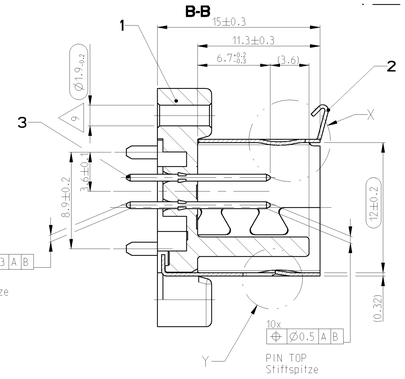

X
10:1

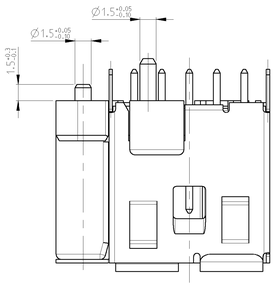

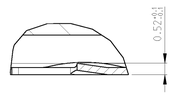

Y
10:1

NOTES
Bemerkungen

1. ONLY THE GERMAN LANGUAGE VERSION AUTHORITATIVE
   Maßgebend ist der deutsche Text
2. PRODUCTION BRACKET TO PACK UP IN THE CARDBOARD
   Produkttraeger verpackt in Karton
3. PRODUCTION BRACKET TO PACK UP IN THE VDO-BOX
   Produkttraeger verpackt in VDO-Box
4. WARPAGE PERMITTED MAX. +/-0.3MM
   Verzug zulaessig max. +/-0.3mm
5. SUPPLIER-MARK
   Lieferanten-Kennzeichnung
6. DATE CODE
   Herstellungskennung
7. CAVITY MARKING
   Kammernummern
8. NOT SPECIFIED DIMENSIONS SEE SPECIFICATION: 114-18654-1
   Fehlende Maße siehe Ausfuehrungsvorschrift:
9. REFERENCE SREW FOR CONNECTION WITH PCB: EJOT PT K22 TORX
   Referenzschraube zur Verbindung mit PCB: EJOT PT K22 Torx
   TORQUE TORX-SCREW:
   Anzugsmoment Torx-Schraube: 30+5 Ncm

CODING 1- -4 AS SHOWN
Kodierung 1- -4 wie gezeichnet

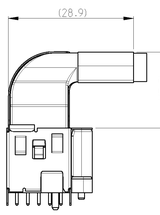

ACCORDING TO
COUPLING 90 DEGR.
ONLY FOR INFORMATION
Passend fuer Kupplung
90 Grad
Nur zur Information

COUPLING 90 DEG.
CODE A-R
Kupplung 90 Grad
Kodierung A-R

10

CODE A-L MIRROR IMAGE
Kodierung A-L spiegelbildlich

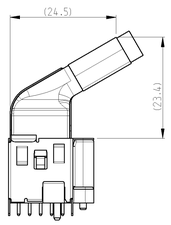

ACCORDING TO
COUPLING 120 DEGR.
ONLY FOR INFORMATION
Passend fuer Kupplung
120 Grad
Nur zur Information

11

COUPLING 120 DEG.
CODE A-R
Kupplung 120 Grad
Kodierung A-R

CODE A-L MIRROR IMAGE
Kodierung A-L spiegelbildlich

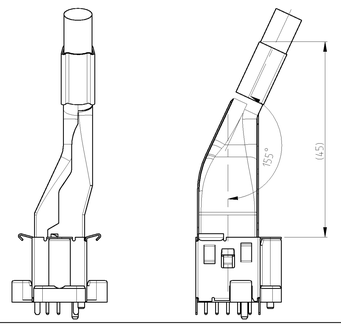

ACCORDING TO
COUPLING 155 DEGR.
ONLY FOR INFORMATION
Passend fuer Kupplung
155 Grad
Nur zur Information

12

COUPLING 155 DEG.
CODE A-R
Kupplung 155 Grad
Kodierung A-R

CODE A-L MIRROR IMAGE
Kodierung A-L spiegelbildlich

PCB-LAYOUT
VIEW FROM SURFACE MOUNT, CODE A
LAYOUT ONLY FOR INFORMATION.
MANUFACTURER OF PCB IS RESPONSIBLE FOR DESIGN
OF ∅ AND MEASUREMENT TOLERANCES.

Leiterplattenlayout
Ansicht von Bestueckungsseite, Kodierung A
Layout nur zur Information.
Fuer die Auslegung der ∅ und der Masstoleranzen
ist der Platinenhersteller verantwortlich.

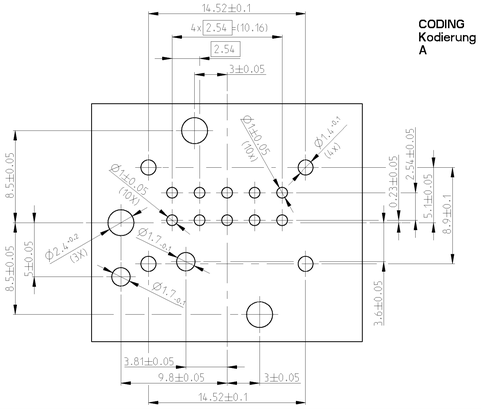

CODING
Kodierung
A

CODINGS
Kodierungen
2:1

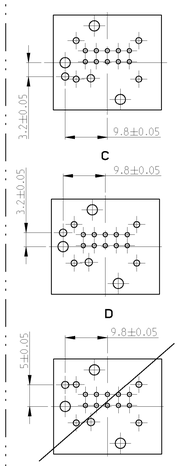

NOTE Bem.	FEATURE Merkmal	tyco Electronics AMP - No.
1	MATED WITH CONNECTOR 90° passend zu Kupplung 90°	EGAUT02116-950 neutral
1	MATED WITH CONNECTOR 120° passend zu Kupplung 120°	EGAUT02116-910 neutral
1	MATED WITH CONNECTOR 155° passend zu Kupplung 155°	EGATN04246-910 neutral

VERSION 2 WITH EMV SHEET METAL Variante 2 mit EMV-Lamellen	TB PIN HEADER SHIELDED (10pos.. 180°)	0.0042	D	4-1418653-4	B	10	PIN	COPPER ALLOY	Tinned	3
						1	SHROUD F. PIN HEADER	CUSN4	Tinned	2
						1	PINHEADER 10 POS.	PPA-GF25	KUNSTSTOFF SIMILAR / ähnlich BN. 1001	1
	TB PIN HEADER SHIELDED (10pos.. 180°)	0.0042	C	3-1418653-4 △1	B	10	PIN	COPPER ALLOY	Tinned	3
						1	SHROUD F. PIN HEADER	CUSN4	Tinned	2
						1	PINHEADER 10 POS.	PPA-GF25	BLACK/schwarz SIMILAR / ähnlich BN. 1001	1
	TB PIN HEADER SHIELDED (10pos.. 180°)	0.0042	B	2-1418653-4 △1	B	10	PIN	COPPER ALLOY	Tinned	3
						1	SHROUD F. PIN HEADER	CUSN4	Tinned	2
						1	PINHEADER 10 POS.	PPA-GF25	NATURE/natur	1
	TB PIN HEADER SHIELDED (10pos.. 180°)	0.0042	A	1-1418653-4 △1	B	10	PIN	COPPER ALLOY	Tinned	3
						1	SHROUD F. PIN HEADER	CUSN4	Tinned	2
						1	PINHEADER 10 POS.	PPA-GF25	BLACK/schwarz SIMILAR / ähnlich BN. 1001	1
VERSION 1 WITHOUT EMV SHEET METAL Variante 1 ohne EMV-Lamellen	TB PIN HEADER SHIELDED (10pos.. 180°)	0.004	A	1-1418653-5 △1	B	10	PIN	COPPER ALLOY	Tinned	3
						1	SHROUD F. PIN HEADER	CUSN4	Tinned	2
						1	PINHEADER 10 POS.	PPA-GF25	BLACK/schwarz SIMILAR / ähnlich BN. 1001	1
	TB PIN HEADER SHIELDED (10pos.. 180°)	0.004	D	4-1418653-3	B	10	PIN	COPPER ALLOY	Tinned	3
						1	SHROUD F. PIN HEADER	CUSN4	Tinned	2
						1	PINHEADER 10 POS.	PPA-GF25	KUNSTSTOFF SIMILAR / ähnlich BN. 1001	1
	TB PIN HEADER SHIELDED (10pos.. 180°)	0.004	C	3-1418653-3	B	10	PIN	COPPER ALLOY	Tinned	3
						1	SHROUD F. PIN HEADER	CUSN4	Tinned	2
						1	PINHEADER 10 POS.	PPA-GF25	BLACK/schwarz SIMILAR / ähnlich BN. 1001	1
	TB PIN HEADER SHIELDED (10pos.. 180°)	0.004	B	2-1418653-3	B	10	PIN	COPPER ALLOY	Tinned	3
						1	SHROUD F. PIN HEADER	CUSN4	Tinned	2
						1	PINHEADER 10 POS.	PPA-GF25	NATURE/natur	1
	TB PIN HEADER SHIELDED (10pos.. 180°)	0.004	A	1-1418653-3 △1	B	10	PIN	COPPER ALLOY	Tinned	3
						1	SHROUD F. PIN HEADER	CUSN4	Tinned	2
						1	PINHEADER 10 POS.	PPA-GF25	BLACK/schwarz SIMILAR / ähnlich BN. 1001	1
	Benennung TITLE	Masse/kg MASS /kg	COD	tyco Bestell-Nr. ORDER NO	REV	QTY	Benennung TITLE	Werkstoff MATERIAL	Oberfl./Farbe SURFACE/COLOUR	Pos. ITEM

"THIS DRAWING IS A CONFIDENTIAL PROPRIETARY DOCUMENT. THE INFORMATION CONTAINED HEREIN IS TO BE USED ONLY WITHIN THE TYCO ELECTRONICS GROUP. NO PART OF THIS DOCUMENT MAY BE COPIED OR REPRODUCED IN ANY FORM OR MANNER WITHOUT PRIOR WRITTEN CONSENT OF TYCO ELECTRONICS CORPORATION, UNLESS SUCH COPYING IS EXPRESSLY AUTHORIZED BY WRITTEN AGREEMENT."

DIMENSIONS: IMAGE DIMENSION (mm)

TOLERANCES UNLESS OTHERWISE SPECIFIED: ALLGEMEINTOLERANZEN
D PLC ± DIN 16901-140
I PLC ± DIN-150
F PLC ± 2768-m
ANGLES: ±1(MIN)
FINISH/OBERFLÄCHE/FARBE

MATERIAL –

DWN	D. Roth	03JUN2005
CHK	J. Weller	02AUG2005
APVD	–	

tyco Electronics AMP GmbH
D - 64625 Bensheim

NAME: PIN HEADER, 10POS., SHIELDED, MQS
Stiftwanne, 10polig, geschirmt, MQS
180 DEGREE / 180 Grad - Version

PRODUCT SPEC PRODUKTSPEC 108-18859
APPLICATION SPEC ANWENDUNGSSPEC.
WEIGHT GEWICHT –

SIZE A0 | CAGE CODE 00779 | DRAWING NO ZEICHNUNG-NR. C-1418653 | RESTRICTED TO NOR FUER –

CUSTOMER DRAWING / KUNDENZEICHNUNG | SCALE MASSSTAB 5:1 | SHEET BLATT 1 OF NOR 1 | REV 82

AMP 4806 REV 31MAR2000