THIS DRAWING IS UNPUBLISHED. RELEASED FOR PUBLICATION 20
© COPYRIGHT 20 BY TYCO ELECTRONICS CORPORATION, ALL RIGHTS RESERVED.

LOC	DIST
CE	00

REVISIONS

P	LTR	DESCRIPTION	DATE	DWN	APVD
	C	REV PER ECR-08-007620	15JAN2009	DDE	LS
	C1	ADD NOTE 3	12MAR2009	BB	SB

1. MATERIAL:
   - CONNECTOR HOUSING: POLYESTER PBT, COLOR: BLUE*
   - PLUG ASSEMBLY:
     - PLUG BODY: PAS, COLOR: BEIGE*
     - INTERNAL BODY: BRASS, NICKEL PLATED
     - INTERNAL COMPONENTS: PEI, COLOR: NATURAL*
     - FERRULE: CERAMIC
     - FERRULE BASE: ALUMINUM ALLOY
     - PLUNGER: ALUMINUM ALLOY
     - SPRING: STAINLESS STEEL
   - TERMINATION COVER: PEI, COLOR: BLACK*
   - PROTECTIVE CAP: VINYL, COLOR: BLACK
   - CRIMP EYELET: COPPER, TIN PLATED
   - INNER EYELET: BRASS
   - POLYMER TUBING: TYGON, COLOR: CLEAR
     HYTREL, COLOR: WHITE
   - STRAIN RELIEF/BOOT: POLYOLEFIN ELASTOMER, COLOR: BLUE*

   *UL94 V-0 RATED AT QUALIFYING THICKNESS.

2. TIGHT BUFFER TO BE 900±50um.

3. INSTRUCTION SHEET: 408-4471 AVAILABLE FOR DOWNLOAD AT www.tycoelectronics.com/documents OR www.ampnetconnect.com/foguide.

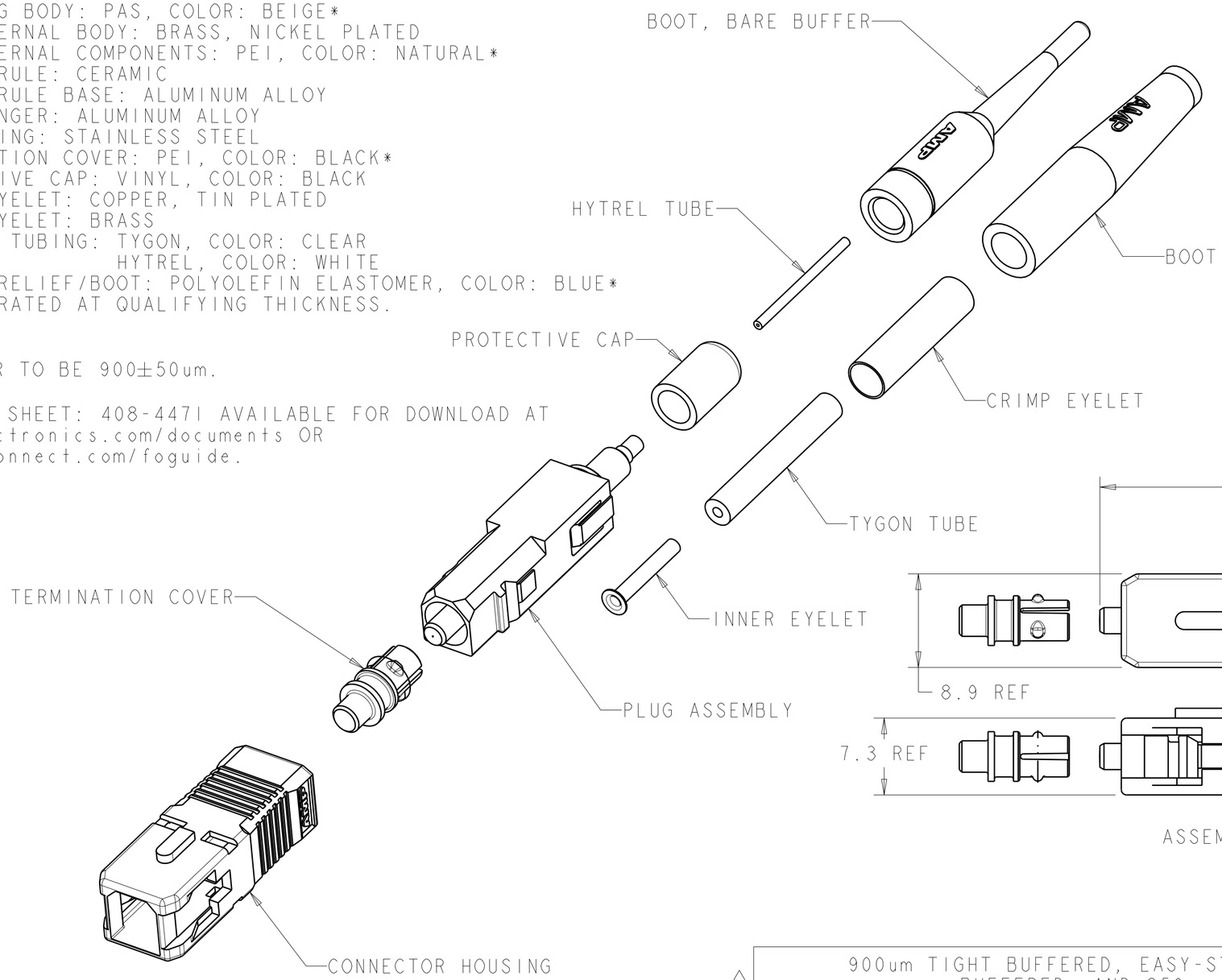

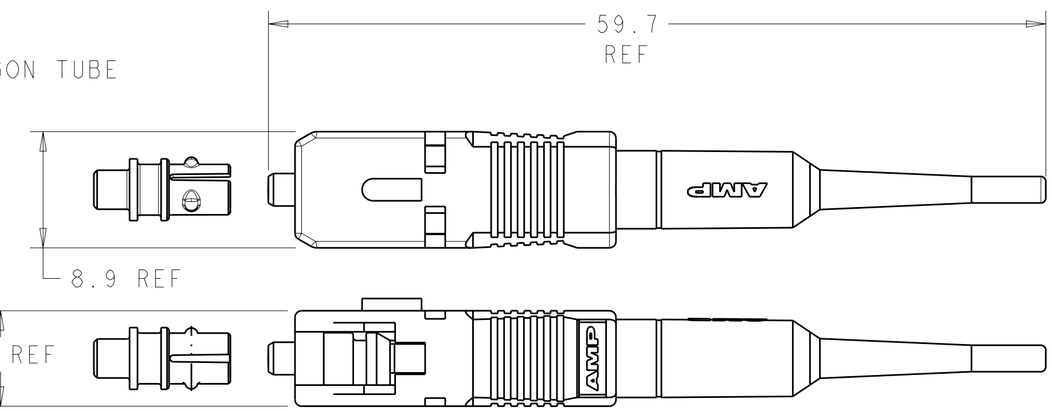

ASSEMBLED CONNECTOR W/ BARE BUFFER BOOT

2 900um TIGHT BUFFERED, EASY-STRIP OR SEMI TIGHT BUFFERED, AND 250um COATED FIBER	6693276-1
KITS WILL TERMINATE TO THE CABLE TYPES LISTED ABOVE	PART NO

4. ANY JACKETED CABLE USED WITH SC CONNECTORS MUST ALLOW FOR THE AXIAL MOVEMENT OF THE BUFFERED FIBER IN THE CABLE JACKET WHICH OCCURS WHEN AN SC CONNECTOR IS MATED TO ANOTHER CONNECTOR OR DEVICE. CERTAIN CABLE CONSTRUCTIONS DO NOT ALLOW AXIAL MOVEMENT AND ARE NOT SUITABLE FOR USE WITH SC CONNECTORS. REFER TO INSPECTION SPECIFICATION 129-1496 FOR A METHOD OF DETERMINING WHETHER A GIVEN CABLE CONSTRUCTION ALLOWS AXIAL MOVEMENT (RESULT OF THE BUFFER PULL TEST SHOULD MEASURE LESS THAN 2 LBF).

THIS DRAWING IS A CONTROLLED DOCUMENT FOR TYCO ELECTRONICS CORPORATION. IT IS SUBJECT TO CHANGE AND THE CONTROLLING ENGINEERING ORGANIZATION SHOULD BE CONTACTED FOR THE LATEST REVISION.

DIMENSIONS: mm

TOLERANCES UNLESS OTHERWISE SPECIFIED:
0 PLC ±-
1 PLC ±-
2 PLC ±-
3 PLC ±-
4 PLC ±-
ANGLES ±-

MATERIAL 1 -
FINISH -

DWN	B.BRIGGS	11JUL2005
CHK	L SAUERWEIN	11JUL2005
APVD	S BUCHTER	11JUL2005

PRODUCT SPEC -
APPLICATION SPEC -
WEIGHT -

Tyco Electronics — Tyco Electronics, Harrisburg, PA 17105-3608

NAME: CONNECTOR KIT, LightCrimp Plus, SC, SINGLEMODE -

SIZE	CAGE CODE	DRAWING NO	RESTRICTED TO
A2	00779	C-6693276	-

CUSTOMER DRAWING — SCALE 3:1 — SHEET 1 OF 1 — REV C1