THIS COPY IS PROVIDED ON A RESTRICTED BASIS AND IS NOT TO BE USED IN ANY WAY DETRIMENTAL TO THE INTERESTS OF PANDUIT CORP.

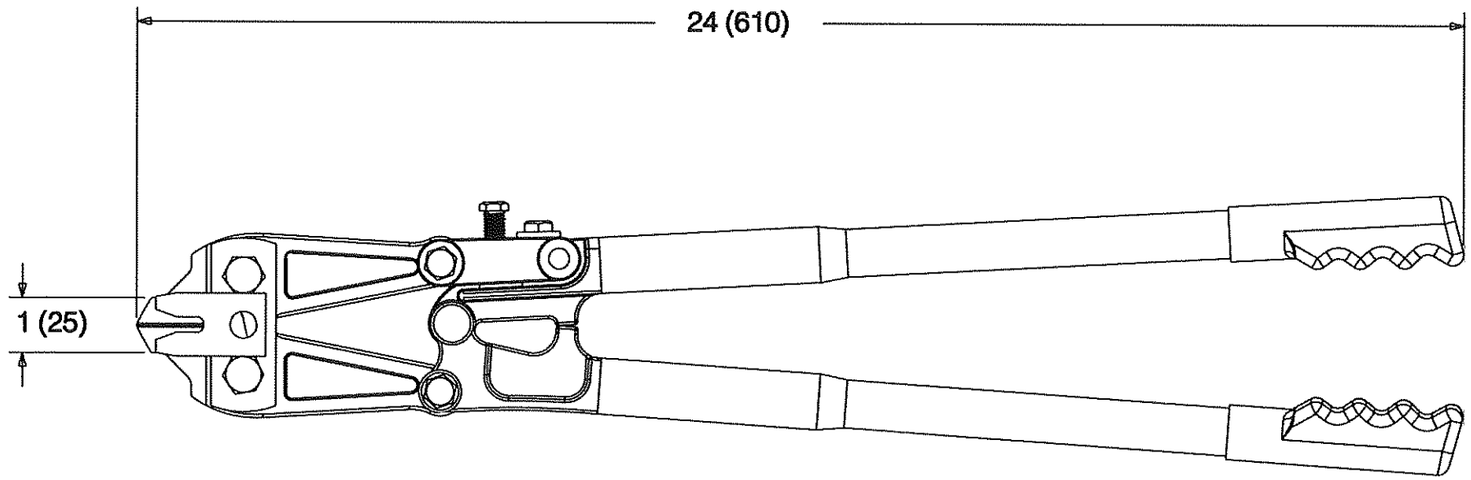

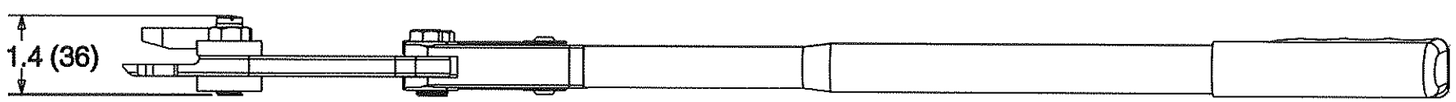

Panduit tool number WGCT-M is used to cut cable tray.

This tool's features include:

- Narrow jaws allow access to closely spaced wires
- Flush cutting design
- Positioning hook facilitates consistent cuts
- Short jaws increase mechanical advantage

Tool Weight: 4.5 lbs / 2 kg

Dimensions in ( ) are mm.

F:\wrkgrp\rvusers\ENGR DOCS\CUSTOMER DRAWINGS\
WD26487B01_00 WGCT-M CD.doc

REV	DATE	BY	CHK'D	DESCRIPTION	ECN	- R	CUST	SUP
00	2-10-11	BLR	BONS	RELEASED	4371	---		

PANDUIT CORP. TINLEY PARK, ILLINOIS

CUSTOMER DRAWING * WGCT-M

UNLESS OTHERWISE SPECIFIED, DIMENSIONAL TOLERANCES ARE:
(.x) ± -- (.xxx) ± --
(.xx) ± -- ANGLES ± --

UNLESS OTHERWISE SPECIFIED, ALL DIMENSIONS ARE GIVEN IN INCHES, THIRD ANGLE PROJECTION.

DRAWN BY: BLR
MATL: NONE
SCALE NONE
DATE: 2-10-11
DRAWING NO. WD26487B01
DWG B SIZE
CHK'D: BONS