CKT SIZE	① MAIN HOUSING MATERIAL: PBT, FILLED	② POWER TERMINAL MATERIAL: COPPER ALLOY FINISH: TIN OVER NICKEL W/ SELECT GOLD	③ TPA MATERIAL: PBT, FILLED	DIMENSION "A"	DIMENSION "B"	DIMENSION "C"	DIMENSION "D"
2P	172511-0002	173693-****	46708-3200	50.71	41.91	13.65	30.48
3P	172511-0003	173693-****	46708-3300	58.21	49.41	21.15	37.98
4P	172511-0004	173693-****	46708-3400	65.71	56.91	28.65	45.48
5P	172511-0005	173693-****	46708-3500	73.21	64.41	36.15	52.98
6P	172511-0006	173693-****	46708-3600	80.71	71.91	43.65	60.48

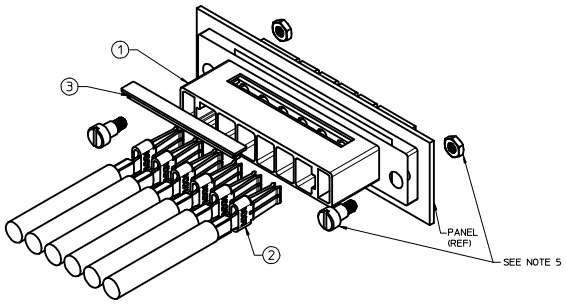

EXPLODED VIEW

MAIN HOUSING

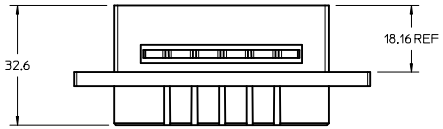

TPA

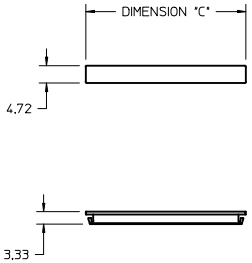

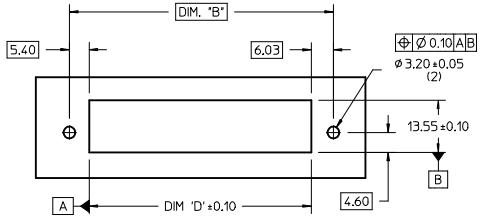

PANEL CUTOUT
(FRONT VIEW)

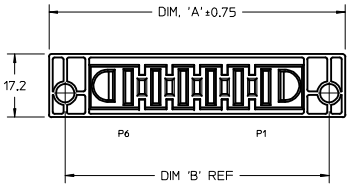

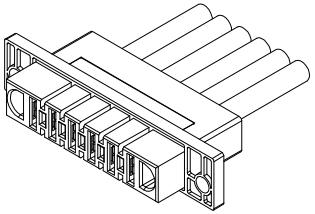

NOTES:
1. SEE CHART FOR MATERIAL DETAILS.
2. PART MATES TO MOLEX PLUG SERIES 172457.
3. ASSEMBLY SHOWN FOR REFERENCE ONLY. EACH ITEM HAS TO BE ORDERED SEPARATELY.
4. SEE SD-173693-001 FOR POWER TERMINAL DETAILS.
5. PANEL MOUNTING HARDWARE: (2) M3 X 0.5 X 4.00 LG PRECISION SHOULDER SCREWS AND (2)m3 x 0.5 HEX NUTS TO BE PURCHASED SEPARATELY BY CUSTOMER.

CHG TRML P/N			
EC NO: UCP2016-4071	DRWN: SCHAFER	2016/04/18	
	CHKD:		
	APPR: BPISZCZOR	2016/10/03	DESCRIPTION
A			REV

QUALITY SYMBOLS: 6=0, 5=0, 4=0

GENERAL TOLERANCES (UNLESS SPECIFIED)

	mm	INCH
4 PLACES	± ---	± ---
3 PLACES	± ---	± ---
2 PLACES	± 0.13	± ---
1 PLACE	± 0.25	± ---
0 PLACE	± ---	± ---

ANGULAR ±1/2°

DRAFT WHERE APPLICABLE MUST REMAIN WITHIN DIMENSIONS

DIMENSION STYLE: MM ONLY	SCALE: 1.5:1	DESIGN UNITS: METRIC	THIRD ANGLE PROJECTION
DRAWN BY: JSCHAFER	DATE: 2014/01/22	TITLE: TEN60 RECEPTACLE ASSY 2-6 CIRCUIT PANEL TO BOARD	
CHECKED BY	DATE		
APPROVED BY: BPISZCZOR	DATE: 2016/10/03	molex	
MATERIAL NO.: SEE CHART		DOCUMENT NO.: SD-172511-001	SHEET NO.: 1 OF 1
SIZE: D	THIS DRAWING CONTAINS INFORMATION THAT IS PROPRIETARY TO MOLEX INCORPORATED AND SHOULD NOT BE USED WITHOUT WRITTEN PERMISSION		