THIS DRAWING IS UNPUBLISHED. RELEASED FOR PUBLICATION – –, .
© COPYRIGHT – By – ALL RIGHTS RESERVED.

LOC	DIST
AF	50

REVISIONS

P	LTR	DESCRIPTION	DATE	DWN	APVD
	J	REVISED PER ECR-12-013445	27OCT12	KH	PD

1 CONTINUOUS STRIP ON REELS.

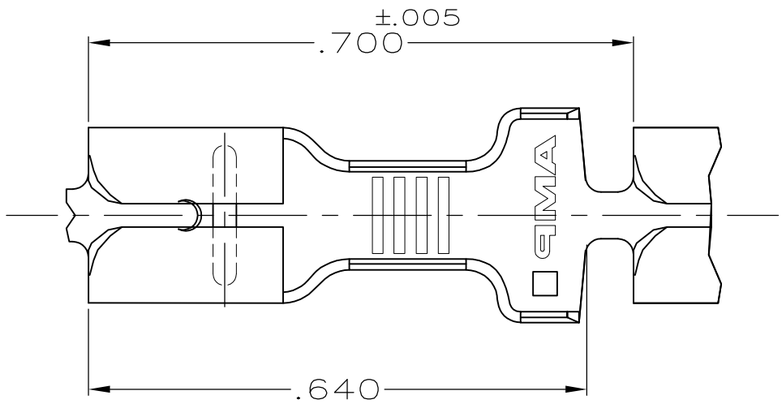

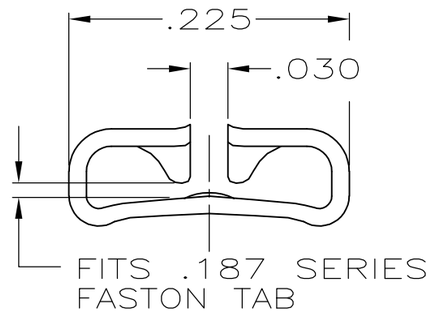

VIEW A–A
SCALE 8:1

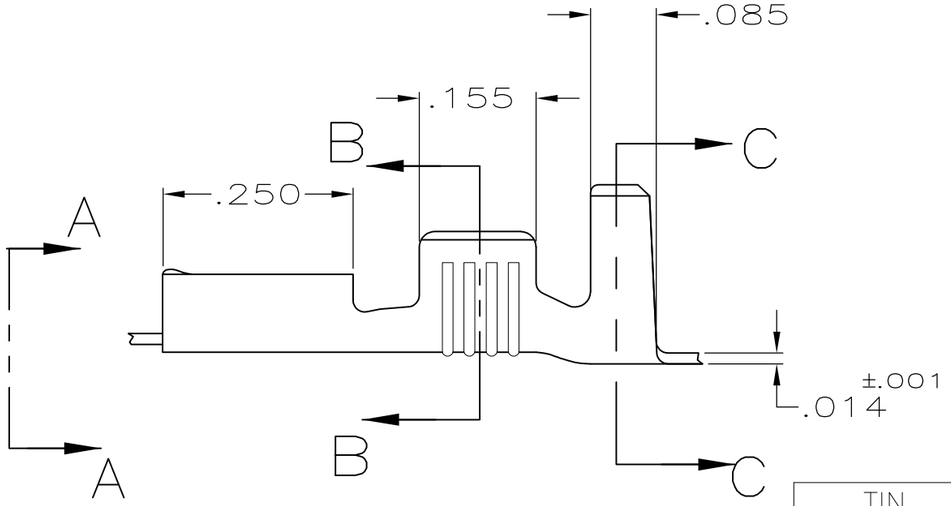

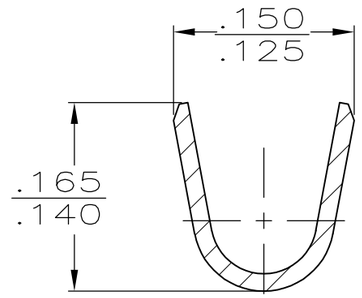

SECTION B–B
SCALE 8:1

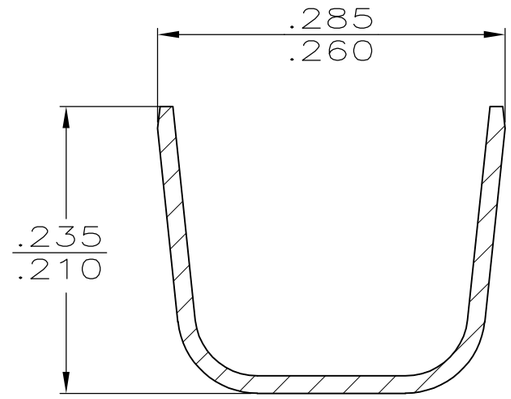

SECTION C–C
SCALE 8:1

FINISH	INSUL RANGE	WIRE SIZE	MATING TAB THK± .001	PART NO
TIN	.180 – .230 OR (2) .110 MAX	18–14 OR (2) #16'S	.020	60742–2
–				60742–1

THIS DRAWING IS A CONTROLLED DOCUMENT.

DIMENSIONS: INCHES

TOLERANCES UNLESS OTHERWISE SPECIFIED:

0 PLC	± –
1 PLC	± –
2 PLC	± –
3 PLC	± .010
4 PLC	± –
ANGLES	± –

MATERIAL: BRASS

FINISH: SEE TABLE

DWN	JR RUTH	3/14/90
CHK	MS FEHER	3/14/90
APVD	C MEYERS	3/14/90
PRODUCT SPEC	—	
APPLICATION SPEC	—	
WEIGHT	—	

TE Connectivity

NAME: RECEPTACLE, FASTON™, .187 SERIES

SIZE	CAGE CODE	DRAWING NO	RESTRICTED TO
A3	00779	C-60742	—

CUSTOMER DRAWING | SCALE 5:1 | SHEET 1 OF 1 | REV J