THIS DRAWING IS UNPUBLISHED. RELEASED FOR PUBLICATION ,19 .
© COPYRIGHT 19 BY AMP INCORPORATED. ALL RIGHTS RESERVED.

LOC	DIST
AJ	16

REVISIONS

P	LTR	DESCRIPTION	DATE	DWN	APVD
	L	REVISED PER EC 0S14-0287-02	25SEP02	DD	KW

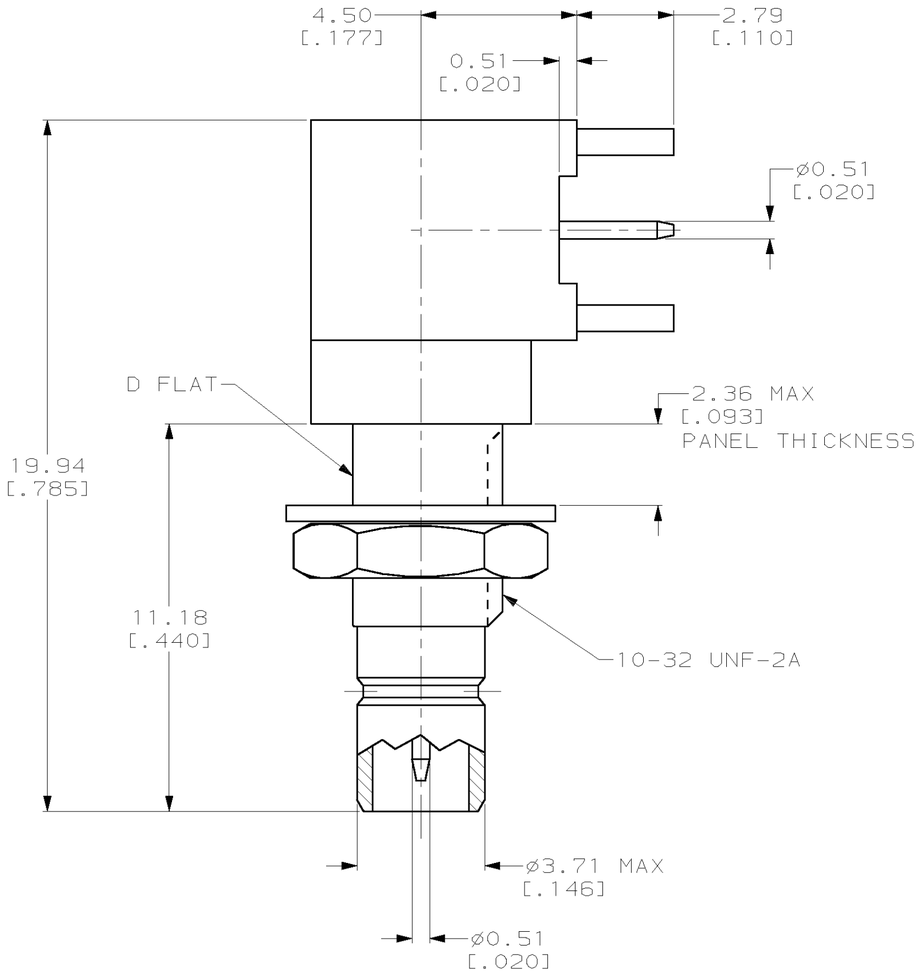

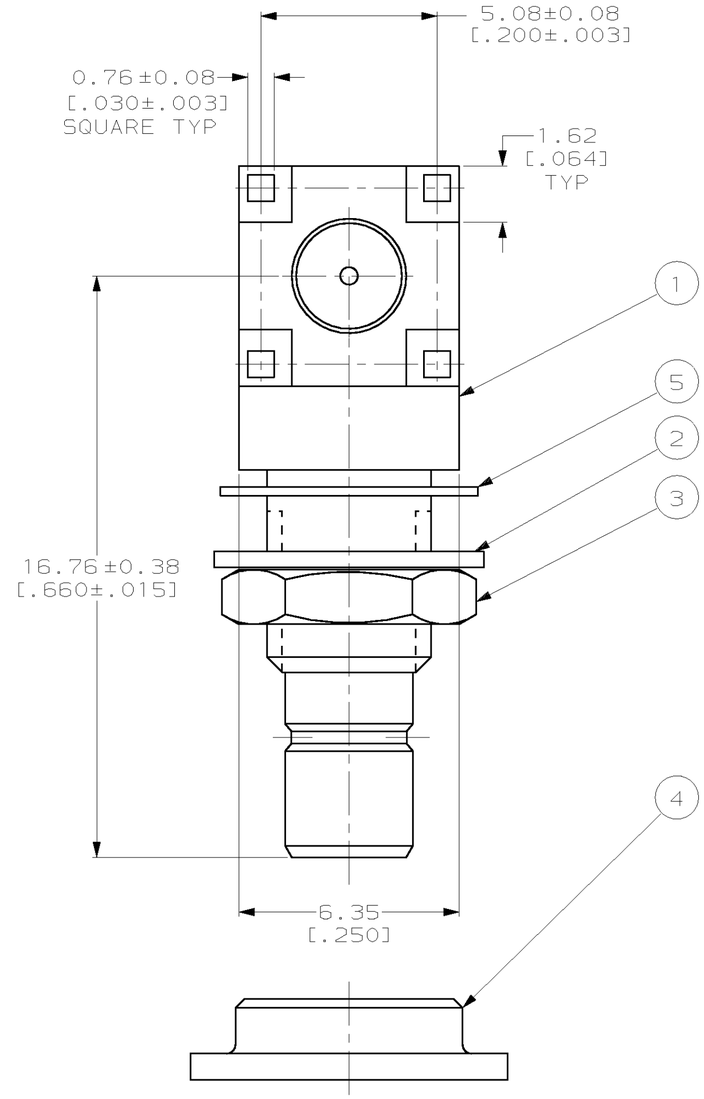

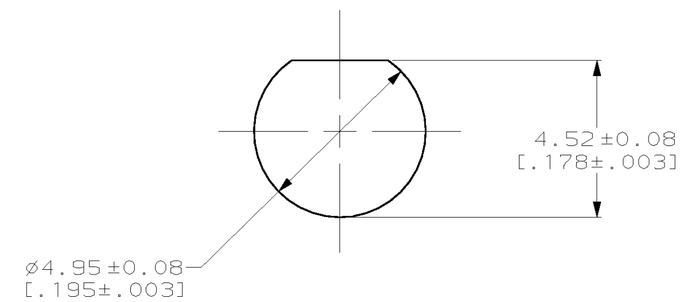

RECOMMENDED PANEL CUTOUT
FOR PARTS WITHOUT ISOLATING BUSHING

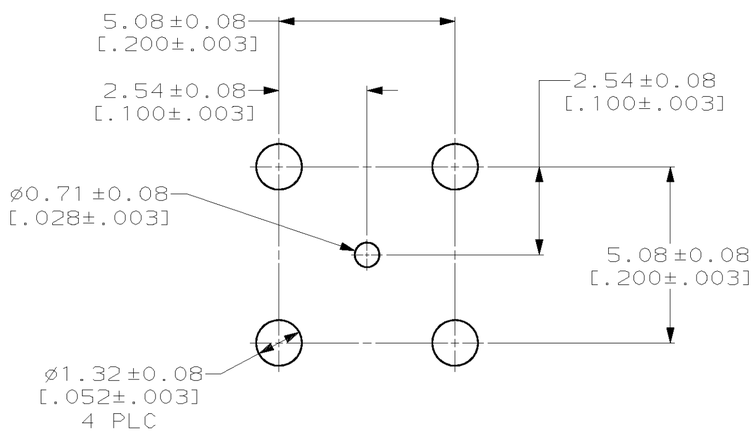

RECOMMENDED PCB CPNFIGURATION

	(5) ISOLATING WASHER QTY=45	(4) ISOLATING BUSHING QTY=45	(3) JAMNUT QTY=45	(2) LOCKWASHER QTY=45	(1) JACK ASSY QTY=40	PART NUMBER
OBSOLETE	-	-	414969-3	982059-5	415496-2	415377-4
	228019-3	415784-1	414969-3	415001-2	415496-2	415377-3

	(5) ISOLATING WASHER QTY=1	(4) ISOLATING BUSHING QTY=1	(3) JAMNUT QTY=1	(2) LOCKWASHER QTY=1	(1) JACK ASSY QTY=1	PART NUMBER
OBSOLETE	-	-	414969-3	982059-5	415496-2	415377-6
	228019-3	415784-1	414969-3	415001-2	415496-2	415377-5
	-	-	414969-3	415001-3	415496-2	415377-2
	-	-	414969-2	415001-2	415496-1	415377-1

THIS DRAWING IS A CONTROLLED DOCUMENT.

DIMENSIONS: mm [INCHES]

TOLERANCES UNLESS OTHERWISE SPECIFIED:

0 PLC	±-
1 PLC	±-
2 PLC	±0.13 [.005]
3 PLC	±-
4 PLC	±-
ANGLES	±-

MATERIAL 1

FINISH 2 3

DWN	B. MOYER	24APR96
CHK	G. MICHAEL	21JUN96
APVD	G. MICHAEL	21JUN96
PRODUCT SPEC	–	
APPLICATION SPEC	–	
WEIGHT	–	

CUSTOMER DRAWING

AMP Incorporated
Harrisburg, PA 17105-3608

NAME: JACK, RTANG, PCB, 75 OHM, SMB

SIZE	CAGE CODE	DRAWING NO
A2	00779	C-415377

SCALE 8:1 | SHEET 1 OF 1 | REV L

415377

AMP 1471-9 REV 23FEB95

04-OCT-01 18:06:11 amp36051 /home/amp36051/edmmod