2404KL (60□x 10L)

NMB-MAT

EMINEBEA.COM

DC Axial Fans

General Specifications

Motor Protection:
Auto Restart/Polarity Protection

Insulation Resistance: 10M Ω or over with a DC500V Megger

Dielectric Withstand Voltage: AC 700V 1s

Allowable Ambient Temperature Range:
B50 Class: -10°C ~ +60°C (Operating)
B30, B40 Class: -10°C ~ +70°C (Operating)
All Class: -40°C ~ +70°C (Storage)
(non-condensing environment)

Outline

Units: inch (mm)

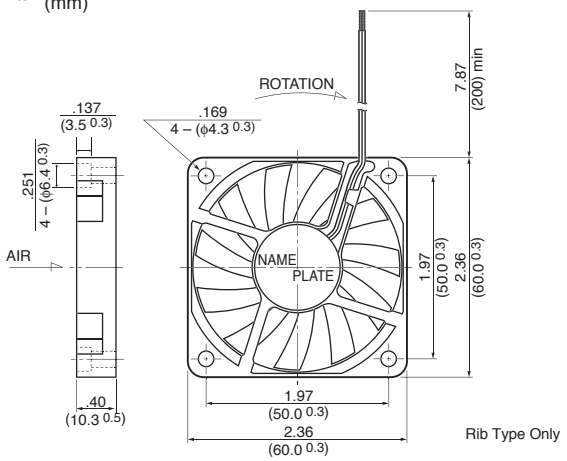

Rib Type Only

Characteristic Curves

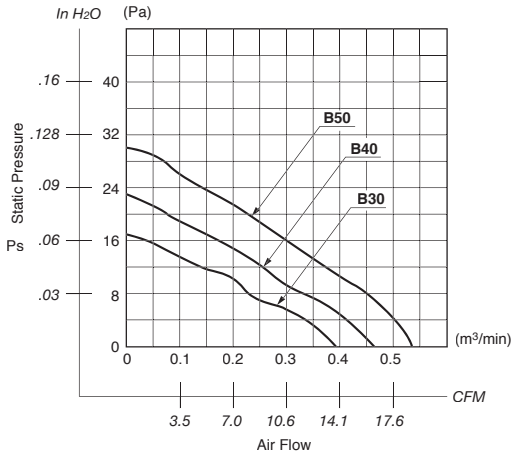

Panel Cut-outs

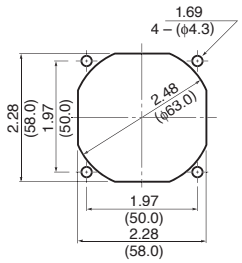

INLET SIDE / OUTLET SIDE

Material

Casing : Plastic (Black) 94V-0
Impeller : Plastic (Black) 94V-0
Bearing : Ball Bearing
Lead Wire: UL1061, AWG26, +Red, -Black

Specifications

MODEL	Product No.	Rated Voltage (V)	Operating Voltage (V)	Current (A)*1	Input Power (W)*1	Speed (min-1)*1	Max. Air Flow CFM*1	Max. Air Flow (m3/min)*1	Max. Static Pressure in H2O	Max. Static Pressure (Pa)*1	Noise (dB)*1	Mass (g)
2404KL-04W-**B30**-	X00	12	10.2 ~ 13.8	0.10	1.20	3600	13.7	0.39	.07	16.7	29.0	25
2404KL-04W-**B40**-	X00	12	10.2 ~ 13.8	0.20	2.40	4200	16.2	0.46	.09	23.0	33.0	25
2404KL-04W-**B50**-	X00	12	10.2 ~ 13.8	0.27	3.24	4800	19.0	0.54	.12	30.1	36.0	25

Rotation: Clockwise Airflow Outlet: Air Out Over Struts *1: Average Values in Free Air