MICRO SWITCH
a Honeywell Division
FED.MFG.CODE 91929

SWITCH–BASIC

CATALOG LISTING
V7–7H15D8–263–1
CW–C6210

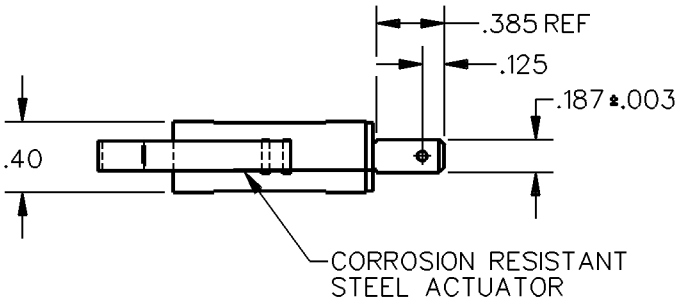

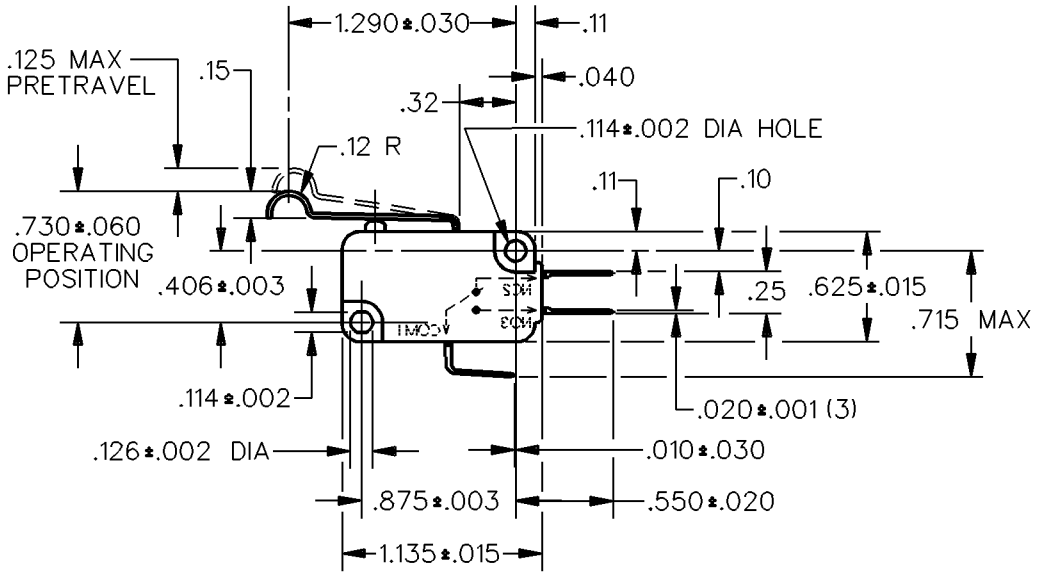

NOTES
1 – SERRATED STATIONARY CONTACTS
2 – MARK CATALOG LISTING AND DATE CODE
ONLY ON SWITCH

CATALOG LISTING V7–7H15D8–263–1
ISSUE 7
REPLACES X88608–V7
RELEASE NO. PR–16571
CHECK
CHECK 17 MAY 88
CHECK JAP
CHECK 17 MAY 88
DRAWN WJM
DDM/CAD

REVISIONS

A	CORR	WJM 20 MAY 88
B	CORR	WJM 10 JUN 88
C	PR–16571	KAG 15 JUL 88
D	C066350	JAP 21 SEP 89
E	CO–69205	BAB 7 JAN 91
F	CO–76215	LJF 11 NOV 93

THIS DRAWING COVERS A PROPRIETARY ITEM AND IS THE PROPERTY OF MICRO SWITCH, A DIVISION OF HONEYWELL. THIS DRAWING IS NOT TO BE COPIED OR USED WITHOUT THE APPROVAL OF MICRO SWITCH.

THIRD ANGLE PROJECTION

CHARACTERISTICS	ELECTRICAL DATA	SCALE FULL / DO NOT SCALE PRINT
OPERATING FORCE————————4 OZ MAX	CONTACT ARRANGEMENT S P D T	UNLESS OTHERWISE SPECIFIED TOLERANCES ARE
RELEASE FORCE————————1/2 OZ MIN		ONE PLACE (.0) ±.030
RELEASE TRAVEL— — — — —.015 MIN		TWO PLACE (.00) ±.015
DIFFERENTIAL TRAVEL——————.050 MAX		THREE PLACE (.000) ±.005
OVERTRAVEL——————————.080 MIN		ANGLES ±
		WEIGHT