THIS DRAWING IS UNPUBLISHED. RELEASED FOR PUBLICATION OCT ,2016.
© COPYRIGHT 2016 Tyco Electronics Japan G.K. ALL RIGHTS RESERVED.

REVISIONS
変更

P	LTR	DESCRIPTION		DATE	DWN	APVD
	E5	REVISED	ECR-16-003341	14OCT2016	KF	HY

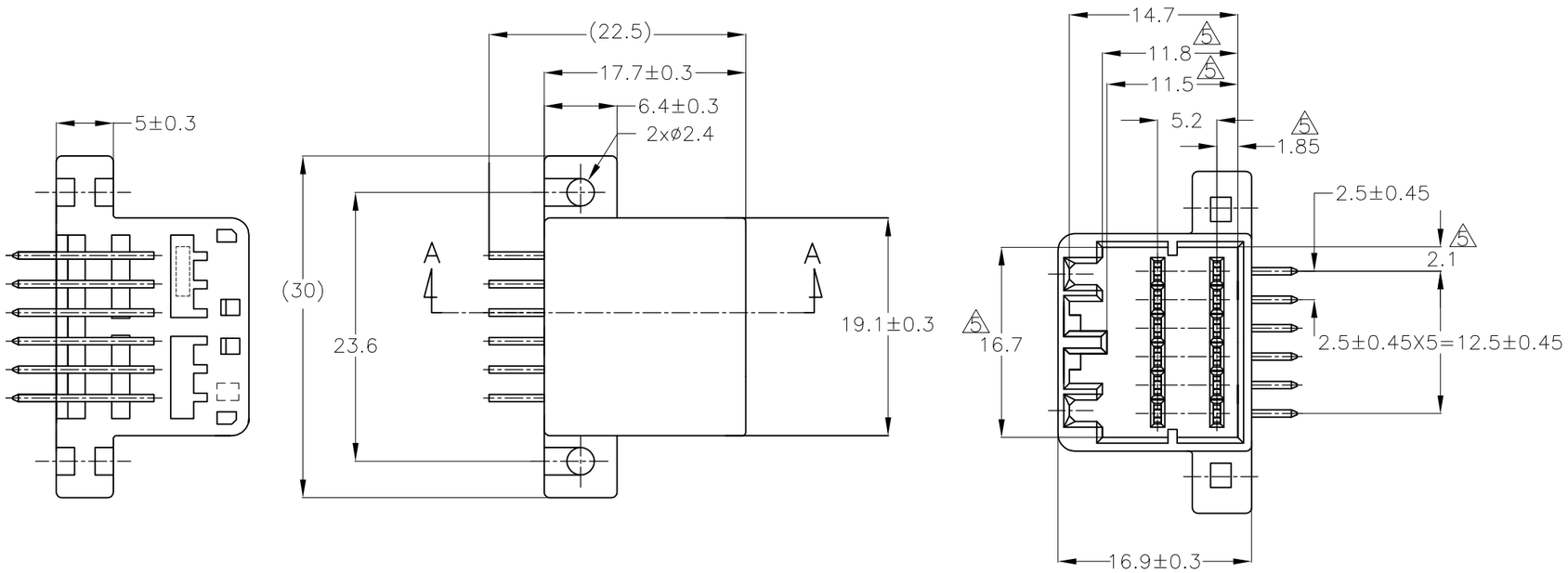

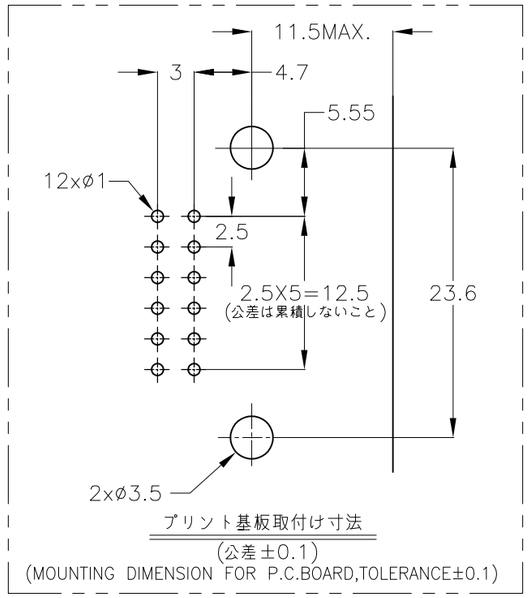

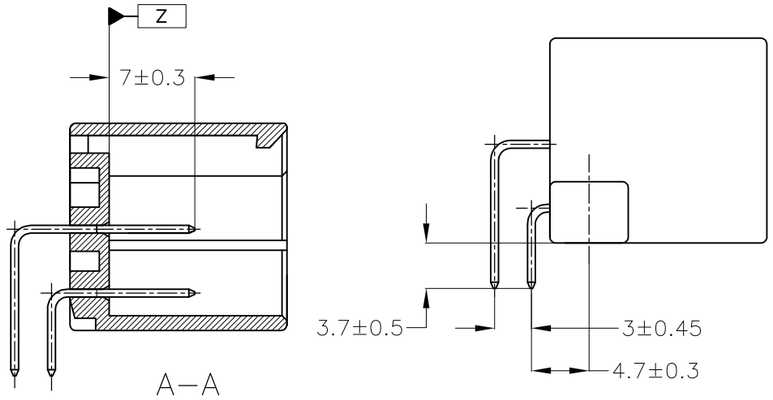

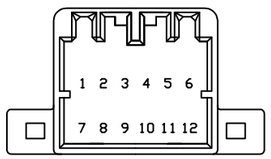

1 APPLICABLE P.C.B. BOARD THICKNESS; 1.6mm
2 RECOMMENDED MOUTING SCREW 3mmDIA 6mmLENGTH(MIN)
TAPPING SCREW SPECIFIED IN JIS B1115,B1122
(TIGHTENING TORQUE;0.392N・m MAX)
3 THE MATING PLUG HSG PART NUMBER;175965
4 APPLICABLE PRODUCT SPEC NO.;108-5281
5 TO BE MEASURED WITHIN 2mm FROM Z
6 CIRCUIT NUMBER.

1 適用プリント基板厚:1.6mm
2 推奨取付ネジ：JIS B1115,B1122 タッピングネジ、
ナベ2種呼び径3、長さ6mm以上（締付トルク：0.392N・m以下）
3 嵌合相手ハウジング：175965
4 適用製品規格番号：108-5281
5 Z より2mmの範囲で測定。
6 回路番号：下図参照のこと。

SELECTIVE-TIN (MATTE)	SELECTIVE GOLD X 12	1~12	BLACK	1-5175974-2
PRE-TIN X 9		1, 2, 8	GREEN	2-175974-4
TIN-LEAD	SELECTIVE GOLD X 3			
PRE-TIN X 9		1, 2, 8	BLACK	2-175974-2
TIN-LEAD	SELECTIVE GOLD X 3			
SELECTIVE-TIN (MATTE)	SELECTIVE-TIN	-	BLACK	175974-3
PRE-TIN		-	BLACK	175974-2
SOLDERING SIDE 半田付け部	CONTACT SIDE 接触部側	GOLD PLATED CIRCUIT NO 6 金めっき回路番号	COLOR 色	PART NUMBER 製品型番
CONTACT FINISH コンタクト仕上				

THIS DRAWING IS A CONTROLLED DOCUMENT.

DIMENSIONS: 単位： 粍 mm

TOLERANCES UNLESS OTHERWISE SPECIFIED: 一般公差
0 PLC ± -
1 PLC ± -
2 PLC ± -
3 PLC ± -
4 PLC ± -
ANGLES ± -

TOLERANCE UNLESS OTHERWISE SPECIFIED: 一般公差
0<*≦ 10 : ±0.2
10<*≦ 30 : ±0.25
30<*≦100 : ±0.3
ANGLE ; 角度 ±3°

MATERIAL 材料 HSG : PBT
CONTACT : BRASS

FINISH 仕上 SEE TABLE

DWN	A.YAMAGUCHI	20AUG04
CHK	H.YAMAGAMI	20AUG04
APVD	S.ISOHATA	20AUG04
PRODUCT SPEC 製品規格	108-5281	
APPLICATION SPEC 取付適用規格	—	
WEIGHT	4.3 g	

TE Connectivity

NAME 名称 12POSITION CAP HOUSING ASSEMBLY(H-TYPE)
040 SERIES MULTILOCK I/O CONN MK-II

SIZE	CAGE CODE	DRAWING NO 番号	RESTRICTED TO
A3	00779	C-175974	—

CUSTOMER DRAWING | SCALE 尺度 2:1 | SHEET 1 OF 1 | REV E5