THIS DRAWING IS UNPUBLISHED. RELEASED FOR PUBLICATION -,- .
© COPYRIGHT - BY TYCO ELECTRONICS CORPORATION. ALL RIGHTS RESERVED.

LOC	DIST
J	

REVISIONS

P	LTR	DESCRIPTION	DATE	DWN	APVD
	D	REDRAWN W/CHANGE FJ00-2455-02	05DEC02	T.K	Y.Y

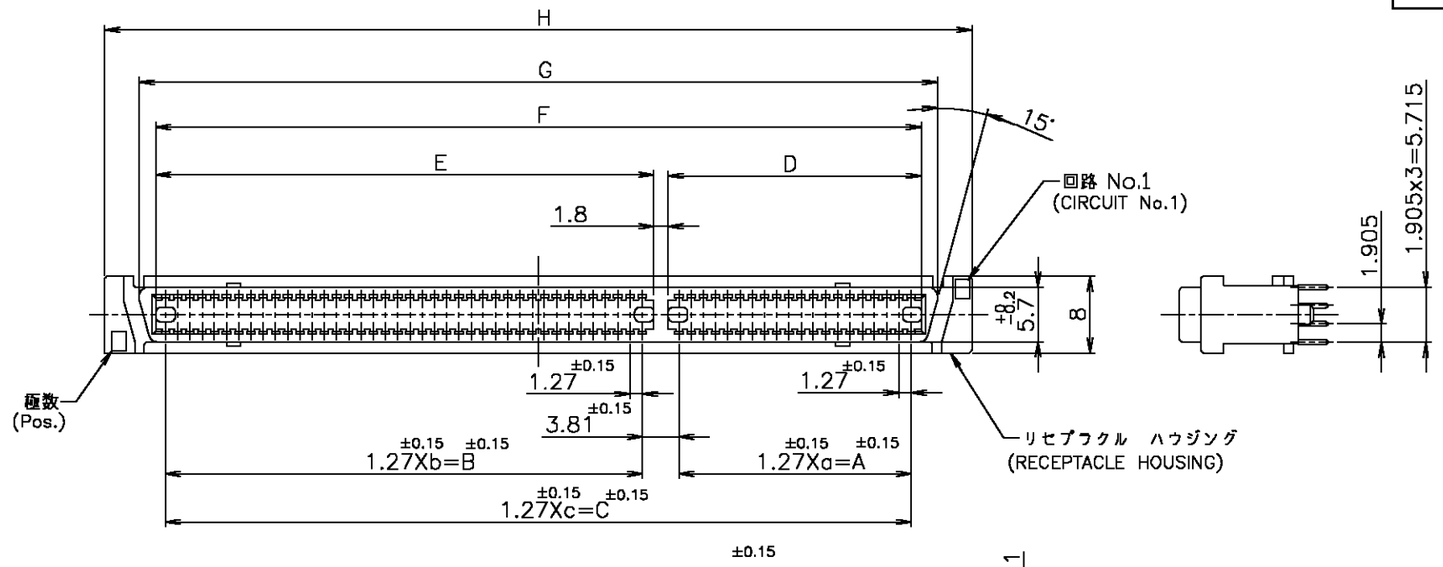

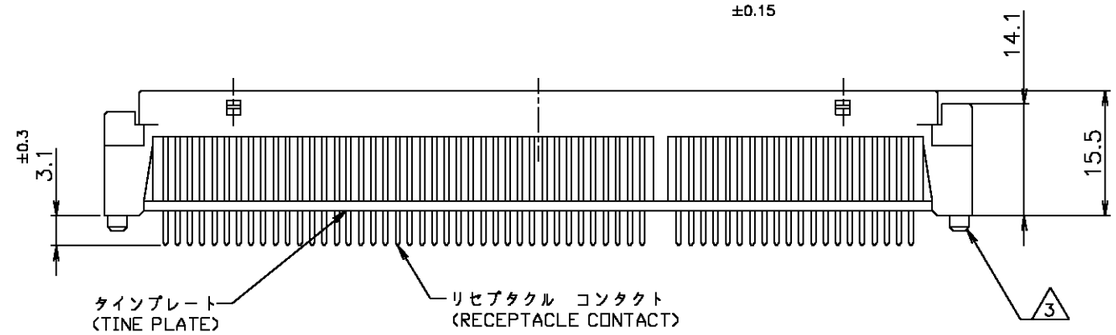

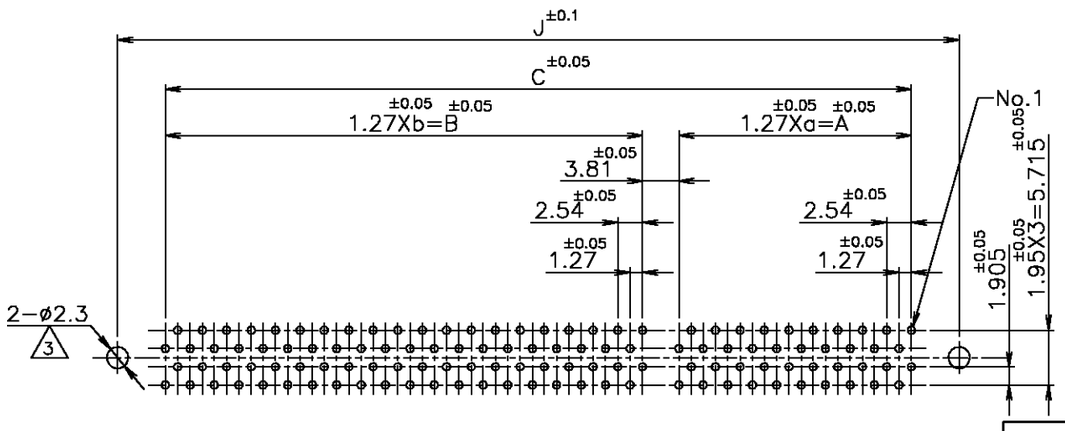

基板仕様
(コネクタ装着側)

P.C.BOARD LAYOUT
(CONNECTOR MOUNT SIDE)

NOTE:

1. MATERIAL:HOUSING:THERMOPLASTIC (UL 94V-0) BLACK.
   CONTACT:COPPER ALLOY
2. FINISH:CONTACT:0.3μm or 0.76μm MIN. Au CONTACT AREA,1μm MIN. TIN LEAD AT TINE, OVER Ni
3. BOSS FOR POSITIONING:P/N -1,-2,-3,-4

注記：

1. 材料：ハウジング；熱可塑性樹脂
   (UL 94V-0) 色、黒。
   ※コンタクト：銅合金
2. 表面仕上げ；
   ※コンタクト：全面 1.3μm以上のニッケル下地メッキに接触部
   0.3μm 又は、0.76μm 以上の金メッキ、脚部 1μm 以上の半田メッキ
3. ボスは型番 -1,-2,-3,-4 のみ

0.76μm	120	19	24.13	39	49.53	〃	77.47	26.13	51.53	79.47	82.56	90.09	87.44	2-	-5
	100	〃	〃	〃	〃	49	62.23	〃	〃	64.23	67.32	74.85	72.2	2-	-4
0.3μm	180	39	49.53	49	62.23	〃	115.57	51.53	64.23	117.57	120.66	128.19	125.54		-8
	160	29	36.83	49	62.23	〃	102.87	38.83	64.23	104.87	107.96	115.49	112.84		-7
	140	29	36.83	39	49.53	〃	90.17	38.83	51.53	92.17	95.26	102.79	100.14		-6
	120	19	24.13	39	49.53	〃	77.47	26.13	51.53	79.47	82.56	90.09	87.44		-5
	100	〃	〃	〃	〃	49	62.23	〃	〃	64.23	67.32	74.85	72.2		-4
	80	〃	〃	〃	〃	39	49.53	〃	〃	51.53	54.62	62.15	59.5		-3
	60	〃	〃	〃	〃	29	36.83	〃	〃	38.83	41.92	49.45	46.8		-2
	40	〃	〃	〃	〃	19	24.13	〃	〃	26.13	29.22	36.75	34.1	176378-1	
GOLD PLATING	Pos.	a	A	b	B	c	C	D	E	F	G	H	J	P/N	

THIS DRAWING IS A CONTROLLED DOCUMENT.

DIMENSIONS: MM

TOLERANCES UNLESS OTHERWISE SPECIFIED:
0 PLC ±-
1 PLC ±-
2 PLC ±-
3 PLC ±-
4 PLC ±-
ANGLES ±-

TOLERANCES UNLESS OTHERWISE SPECIFIED
一般公差
10? : ±0.2
30? ?10 : ±0.25
100? ?10 : ±0.3
ANGLES ±3°

MATERIAL 1

FINISH 2

DWN	T.KAWAMAE	05DEC02
CHK	H.SHIRAI	05DEC02
APVD	Y.YAMAMOTO	05DEC02
PRODUCT SPEC	108-5309	
APPLICATION SPEC		
WEIGHT		

CUSTOMER DRAWING

tyco Electronics

Tyco Electronics AMP K.K.
Kawasaki, Japan

NAME: 1.27 FH CONN. (VERTICAL) REC, 18mm STACK

SIZE	CAGE CODE	DRAWING NO	RESTRICTED TO
A3	00779	C-176378	—

SCALE	SHEET	REV
NTS	1 OF 1	D

AMP 1470-19 REV 31MAR2000

02DEC2002 4:31pm