Diazed/Neozed Fuses

Littelfuse
POWR-GARD™ Products

Littelfuse fast-acting (gL-gG) fuses are used for the protection of cables against short circuits. Time-lag (aM) fuses are used for protection of motors. Ratings are available in standard Diazed and compact Neozed styles.

SPECIFICATIONS

Standards: DIN 49.522-DIN 49.525, IEC 269-3

Approvals: VDE

Example part number: *DZ27F4*

Base Size	Type	Current Range	Voltage AC/DC	Interrupting Rating
14	D01	2-16A	380V/250V	50kA
18	D02	20-63A	380V/250V	50kA
16	DI	2-25A	500V	80kA
27	DII	2-25A	500V	80kA
33	DIII	35-63A	500V	80kA

All Diazed and Neozed fuses incorporate a blown fuse indicator.

Neozed Fuses

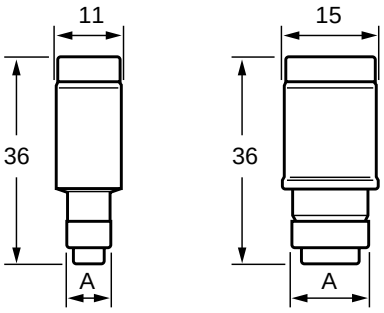

D01 **D02**

Diazed Fuses

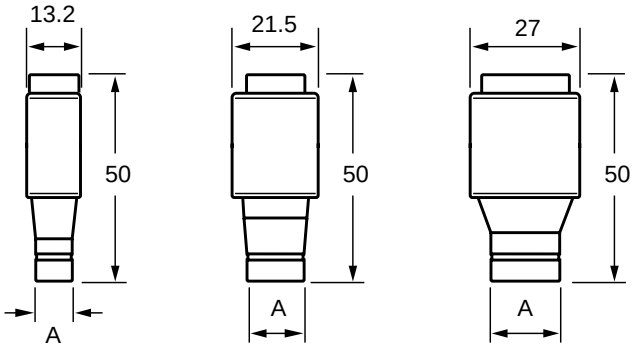

DI **DII** **DIII**

All dimensions are in “mm”.

Amperage	Color	DIAZED FUSES gL-gG DI	DII	DIII	aM DI	DII	DIII	DIM. A (mm)	NEOZED FUSES gL-gG D01	D02	DIM. A (mm)
2	Pink	DZ16F2	DZ27F2	—	DZ16T2	DZ27T2	—	6	D0Z14G2	—	7.3
4	Brown	DZ16F4	DZ27F4	—	DZ16T4	DZ27T4	—	6	D0Z14G4	—	7.3
6	Green	DZ16F6	DZ27F6	—	DZ16T6	DZ27T6	—	6	D0Z14G6	—	7.3
10	Red	DZ16F10	DZ27F10	—	DZ16T10	DZ27T10	—	8	D0Z14G10	—	8.5
16	Grey	DZ16F16	DZ27F16	—	DZ16T16	DZ27T16	—	10	D0Z14G16	—	9.7
20	Blue	DZ16F20	DZ27F20	—	DZ16T20	DZ27T20	—	12	—	D0Z18G20	10.9
25	Yellow	DZ16F25	DZ27F25	—	DZ16T25	DZ27T25	—	14	—	D0Z18G25	12.1
35	Black	—	—	DZ33F35	—	—	DZ33T35	16	—	D0Z18G35	13.3
50	White	—	—	DZ33F50	—	—	DZ33T50	18	—	D0Z18G50	14.5
63	Copper	—	—	DZ33F63	—	—	DZ33T63	20	—	D0Z18G63	15.9
Base Size (mm)		16	27	33	16	27	33	—	14	18	—

Inter-national Products