FDD15 SERIES

DC - DC CONVERTER
10 ~ 15W SINGLE & DUAL OUTPUT

FEATURES

- LOW COST
- 2:1 WIDE INPUT RANGE
- I/O ISOLATION
- LC INPUT FILTER
- SHORT CIRCUIT PROTECTION
- HIGH PERFORMANCE
- 2 YEARS WARRANTY

MODEL LIST

MODEL NO.	INPUT VOLTAGE	OUTPUT WATTAGE	OUTPUT VOLTAGE	OUTPUT CURRENT	EFF. (min.)
Single Output Models					
FDD15 - 03S1	9~18 VDC	10 WATTS	+ 3.3 VDC	3000 mA	75%
FDD15 - 05S1	9~18 VDC	10 WATTS	+ 5 VDC	2000 mA	65%
FDD15 - 12S1	9~18 VDC	10 WATTS	+ 12 VDC	834 mA	65%
FDD15 - 15S1	9~18 VDC	10 WATTS	+ 15 VDC	667 mA	65%
FDD15 - 05S2	18~36 VDC	15 WATTS	+ 5 VDC	3000 mA	70%
FDD15 - 12S2	18~36 VDC	15 WATTS	+ 12 VDC	1250 mA	76%
FDD15 - 15S2	18~36 VDC	15 WATTS	+ 15 VDC	1000 mA	78%
FDD15 - 03S3	36~72 VDC	10 WATTS	+ 3.3 VDC	3000 mA	80%
FDD15 - 05S3	36~72 VDC	15 WATTS	+ 5 VDC	3000 mA	70%
FDD15 - 12S3	36~72 VDC	15 WATTS	+ 12 VDC	1250 mA	76%
FDD15 - 15S3	36~72 VDC	15 WATTS	+ 15 VDC	1000 mA	78%
Dual Output Models					
FDD15 - 12D1	9~18 VDC	10 WATTS	± 12 VDC	± 417 mA	73%
FDD15 - 15D1	9~18 VDC	10 WATTS	± 15 VDC	± 334 mA	75%
FDD15 - 12D2	18~36 VDC	15 WATTS	± 12 VDC	± 625 mA	80%
FDD15 - 15D2	18~36 VDC	15 WATTS	± 15 VDC	± 500 mA	80%
FDD15 - 12D3	36~72 VDC	15 WATTS	± 12 VDC	± 625 mA	80%
FDD15 - 15D3	36~72 VDC	15 WATTS	± 15 VDC	± 500 mA	80%

CIRCUIT SCHEMATIC

・Block diagram for FDD15 series with single output

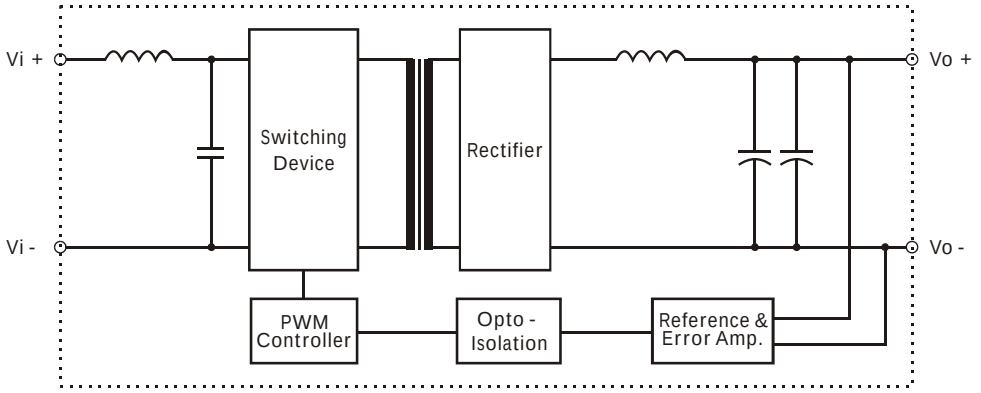

・Block diagram for FDD15 series with dual output

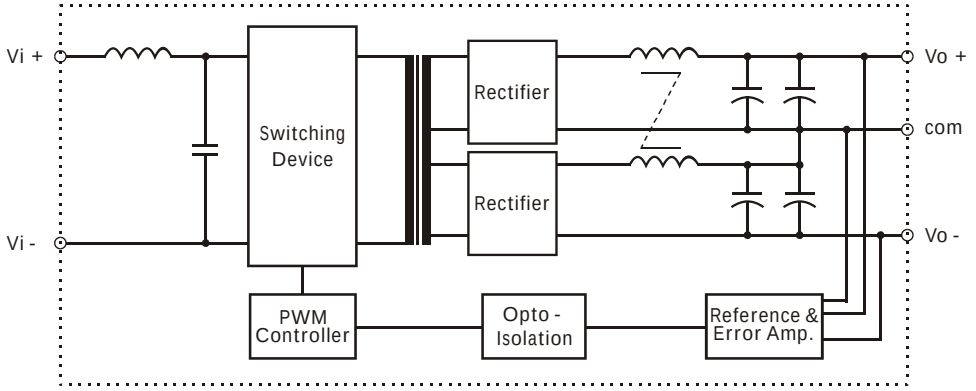

FDD15 SERIES

DC - DC CONVERTER
10 ~ 15W TRIPLE OUTPUT

FEATURES

- LOW COST
- 2:1 WIDE INPUT RANGE
- I/O ISOLATION
- LC INPUT FILTER
- SHORT CIRCUIT PROTECTION
- HIGH PERFORMANCE
- 2 YEARS WARRANTY

MODEL LIST

MODEL NO.	INPUT VOLTAGE	OUTPUT WATTAGE	OUTPUT VOLTAGE	OUTPUT CURRENT	EFF. (min.)
Triple Output Models					
FDD15 - 0512T1	9~18 VDC	10 WATTS	+5 / ±12 VDC	1.5A / ±0.12A	77%
FDD15 - 0515T1	9~18 VDC	10 WATTS	+5 / ±15 VDC	1.5A / ±0.1 A	77%
FDD15 - 0512T2	18~36 VDC	15 WATTS	+5 / ±12 VDC	2 A / ±0.2 A	80%
FDD15 - 0515T2	18~36 VDC	15 WATTS	+5 / ±15 VDC	2 A / ±0.16A	80%
FDD15 - 0512T3	36~72 VDC	15 WATTS	+5 / ±12 VDC	2 A / ±0.2 A	80%
FDD15 - 0515T3	36~72 VDC	15 WATTS	+5 / ±15 VDC	2 A / ±0.16A	80%

CIRCUIT SCHEMATIC
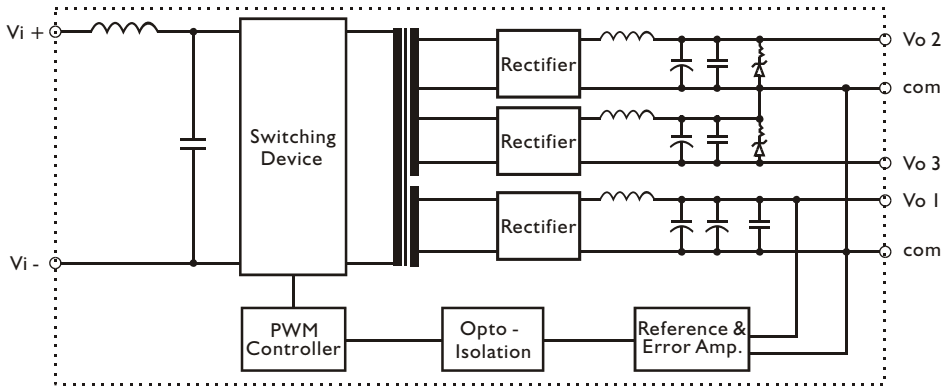
Block diagram for FDD15 series with triple output