DRAWING MADE IN THIRD ANGLE PROJECTION
THIS DRAWING IS UNPUBLISHED. RELEASED FOR PUBLICATION .19 .
© COPYRIGHT 19 BY AMP INCORPORATED. ALL INTERNATIONAL RIGHTS RESERVED.

LOC	DIST			REVISIONS			
GP	00	P	F	ZONE	LTR	DESCRIPTION	DATE	APPD
					F	REVISED PER EC 0S13-0246-04	20JUN04	JG

1. FLAME RETARDANT 94V-0 RATED THERMOPLASTIC; BLACK.
2. 2.54µm [.000100] MIN BRIGHT TIN-LEAD ON TERMINATION END, 0.76µm [.000030] MIN GOLD ON CONTACT AREA, ALL OVER 1.27µm [.000050] MIN NICKEL.
3. NO SLOT ON THIS END FOR 10 AND 14 POSITION HOUSINGS.
4. NO SLOT FOR SNAP-IN POLARIZER ON THIS END FOR 10 AND 14 POSITION HOUSINGS.
5. FOR MILITARY POLARIZATION, ORDER SNAP-IN POLARIZER 499991-2 (BULK PACK OF 50).
6. POSITION NO 1 INDICATOR.
7. COORDINATE DIMENSION APPLIES FROM CENTER OF ACTUAL FEATURE.
8. FOR LATCHES ORDER 111451, 2 PER ASSEMBLY.
9. PHOSPHOR BRONZE PER QQ-B-750.
10. STRAIN RELIEF 111547 MUST BE ORDERED SEPARATELY.
11. 2.54µm [.000100] MIN TIN ON TERMINATION END, 0.76µm [.000030] MIN GOLD ON CONTACT AREA, ALL OVER 1.27µm [.000050] MIN NICKEL.

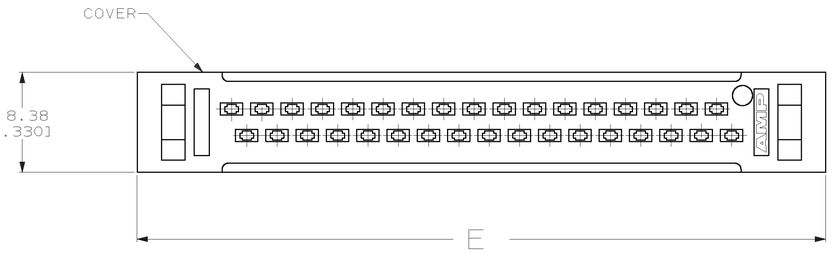

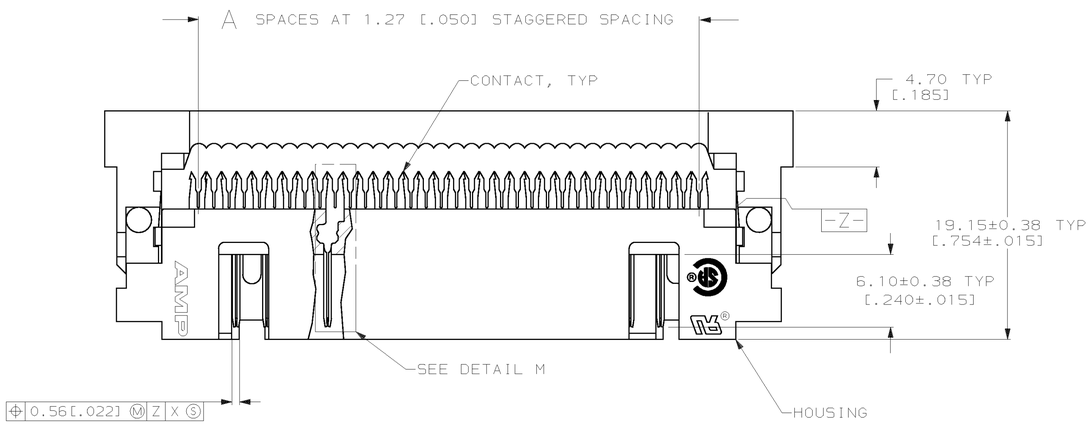

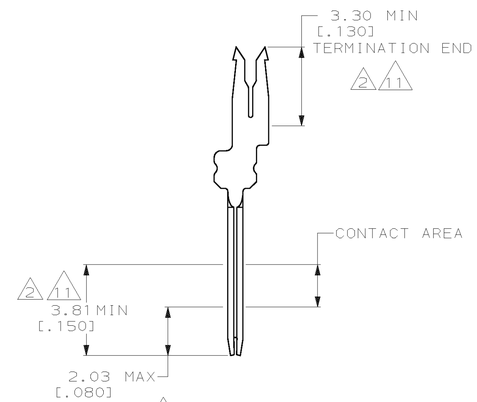

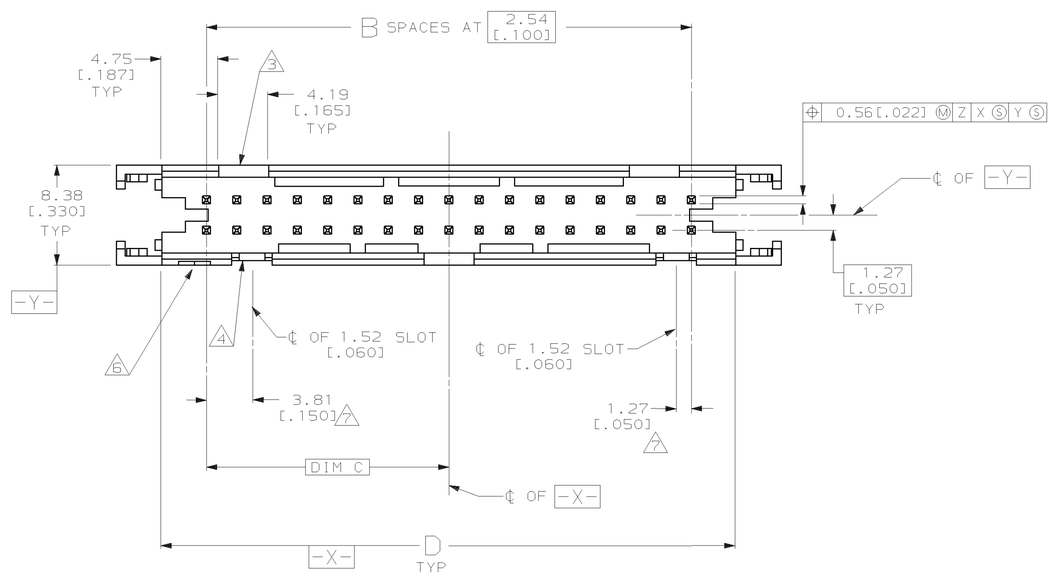

COVER NOT SHOWN
IN THIS VIEW
FOR CLARITY

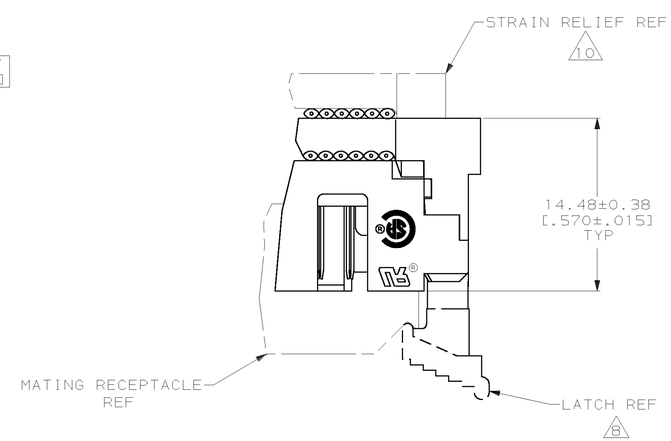

TERMINATED ASSEMBLY
(ASSEMBLED BY CUSTOMER)

11	95.81 [3.772]	86.21 [3.394]	39.37 [1.550]	31	63	64	2-111446-6
11	89.59 [3.527]	81.13 [3.194]	36.83 [1.450]	29	59	60	2-111446-5
11	70.41 [2.772]	60.81 [2.394]	26.67 [1.050]	21	43	44	2-111446-4
11	65.33 [2.572]	55.73 [2.194]	24.13 [.950]	19	39	40	2-111446-3
11	57.71 [2.272]	48.11 [1.894]	20.32 [.800]	16	33	34	2-111446-2
11	52.63 [2.072]	43.03 [1.694]	17.78 [.700]	14	29	30	2-111446-1
11	47.55 [1.872]	37.95 [1.494]	15.24 [.600]	12	25	26	2-111446-0
11	45.01 [1.772]	35.41 [1.394]	13.97 [.550]	11	23	24	1-111446-9
11	39.93 [1.572]	30.33 [1.194]	11.43 [.450]	9	19	20	1-111446-8
11	78.03 [3.072]	68.43 [2.694]	30.48 [1.200]	24	49	50	1-111446-7
11	34.85 [1.372]	25.25 [.994]	8.89 [.350]	7	15	16	1-111446-6
11	32.31 [1.272]	22.71 [.894]	7.62 [.300]	6	13	14	1-111446-5
11	27.230 [1.072]	17.63 [.694]	5.08 [.200]	4	9	10	1-111446-4
2	95.81 [3.772]	86.21 [3.394]	39.37 [1.550]	31	63	64	1-111446-3
2	89.59 [3.527]	81.13 [3.194]	36.83 [1.450]	29	59	60	1-111446-2
2	78.03 [3.072]	68.43 [2.694]	30.48 [1.200]	24	49	50	1-111446-1
2	70.41 [2.772]	60.81 [2.394]	26.67 [1.050]	21	43	44	1-111446-0
2	65.33 [2.572]	55.73 [2.194]	24.13 [.950]	19	39	40	111446-9
2	57.71 [2.272]	48.11 [1.894]	20.32 [.800]	16	33	34	111446-8
2	52.63 [2.072]	43.03 [1.694]	17.78 [.700]	14	29	30	111446-7
2	47.55 [1.872]	37.95 [1.494]	15.24 [.600]	12	25	26	111446-6
2	45.01 [1.772]	35.41 [1.394]	13.97 [.550]	11	23	24	111446-5
2	39.93 [1.572]	30.33 [1.194]	11.43 [.450]	9	19	20	111446-4
2	34.85 [1.372]	25.25 [.994]	8.89 [.350]	7	15	16	111446-3
2	32.31 [1.272]	22.71 [.894]	7.62 [.300]	6	13	14	111446-2
2	27.230 [1.072]	17.63 [.694]	5.08 [.200]	4	9	10	111446-1
CONTACT FINISH	E	D	C	B	A	NO OF POSN	PART NUMBER

DO NOT SCALE PRINT.
UNLESS SPECIFIED
DIMENSIONS IN mm [INCHES]
TOLERANCES ON :
2 PLC DEC ± 0.13[.005]
3 PLC DEC ± -
ANGLES ± -

MATERIAL
HOUSING & COVER: 1
CONTACTS: 9

FINISH
CONTACTS: SEE TABLE

DR 7-11-90 H MOLL
CHK 8-1-90 F.M.HEINEY
APPD 8-2-90 D.HOFFMAN
APPD 8-3-90 D.HOFFMAN

PRODUCT SPEC
108-1336

APPLICATION SPEC
114-7011

WEIGHT _

AMP INCORPORATED
Harrisburg, Pa. 17105

NAME
UNIV I/O PIN CONN, WITHOUT MOUNTING EARS, AMP-LATCH™

SIZE D | CAGE CODE 00779 | DRAWING NO 111446
SCALE 4:1 | SHEET 1 OF 1

CUSTOMER DRAWING