ENGINEERING NUMBER	CKT. SIZE	A	B	C
87569-1010	10	15.40	12.20	14.25
87569-1012	12	17.40	14.20	16.25
87569-1014	14	19.40	16.20	18.25
87569-1016	16	21.40	18.20	20.25
87569-1020	20	25.40	22.20	24.25
87569-1022	22	27.40	24.20	26.25
87569-1024	24	29.40	26.20	28.25
87569-1026	26	31.40	28.20	30.25
87569-1030	30	35.40	32.20	34.25
87569-1032	32	37.40	34.20	36.25
87569-1034	34	39.40	36.20	38.25
87569-1040	40	45.40	42.20	44.25
87569-1044	44	49.40	46.20	48.25
87569-1050	50	55.40	52.20	54.25

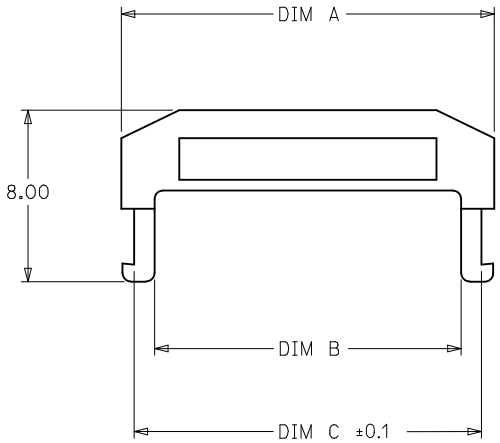

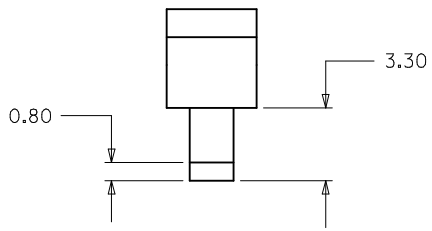

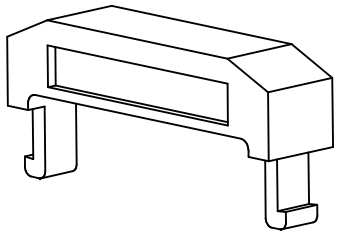

87569 - 1 0 * *

CKT. SIZE

NOTES

1. MATERIAL : THERMOPLASTIC, UL94V-0 BLACK
2. FOR ILLUSTRATION PURPOSES A 12 CIRCUIT SIZE PART IS SHOWN.
3. FOR ALL OTHER CIRCUIT SIZES CONTACT FACTORY.

ADD 32CKT OPTION
EC NO: S2010-0273
DRWN:SKANG 2009/09/28
CH'KD:ATSEE 2009/11/13
APPR:MLONG 2009/11/17
DESCRIPTION
REV
A3

QUALITY SYMBOLS
=0
=0
=0

GENERAL TOLERANCES (UNLESS SPECIFIED)

	mm	INCH
4 PLACES	± ---	± ---
3 PLACES	± ---	± ---
2 PLACES	± 0.2	± ---
1 PLACE	± ---	± ---
ANGULAR ± 3 °		

DRAFT WHERE APPLICABLE MUST REMAIN WITHIN DIMENSIONS

DIMENSION STYLE: MM ONLY
SCALE: NTS
DESIGN UNITS: METRIC
THIRD ANGLE PROJECTION

DRAWN BY: MSAKTHI DATE: 1999/02/25
CHECKED BY: JSGOH DATE: 1999/07/19
APPROVED BY: MLONG DATE: 2009/11/13

TITLE: MGRID, 2MM DUAL ROW IDT

MOLEX INCORPORATED

MATERIAL NO.: SEE TABLE
DOCUMENT NO.: SD-87569-008
SHEET NO.: 1 OF 1
SIZE: A3

THIS DRAWING CONTAINS INFORMATION THAT IS PROPRIETARY TO MOLEX INCORPORATED AND SHOULD NOT BE USED WITHOUT WRITTEN PERMISSION