THIS DRAWING IS UNPUBLISHED. RELEASED FOR PUBLICATION ,19 .
(C) COPYRIGHT 19 BY AMP INCORPORATED. ALL RIGHTS RESERVED.

LOC	DIST
GP	00

REVISIONS

P	LTR	DESCRIPTION	DATE	DWN	APVD
	0	INITIAL RELEASE	15JAN03	ECC	RCF
	–	–	-	–	–

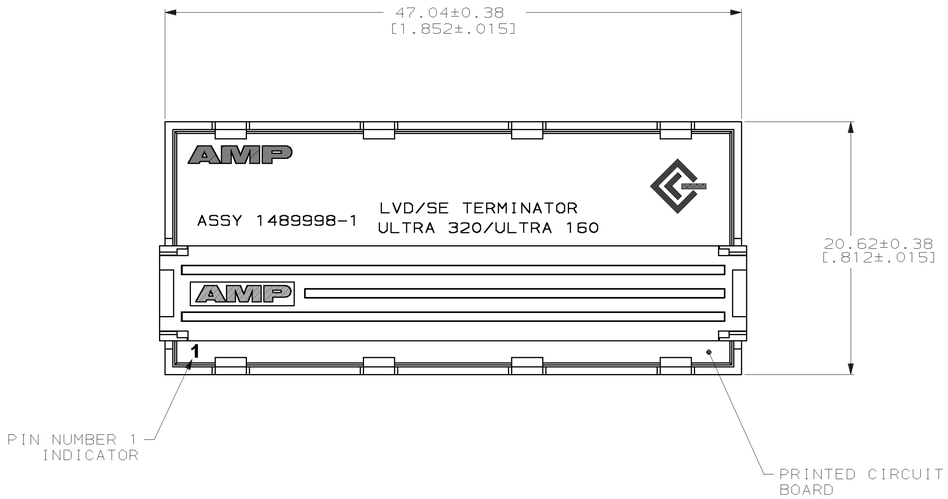

SIGNAL NAME (SINGLE-ENDED MODE)	SIGNAL NAME (LVD MODE)	CABLE CONDUCTOR NUMBER		SIGNAL NAME (LVD MODE)	SIGNAL NAME (SINGLE-ENDED MODE)
GROUND	+DB(12)	1	2	-DB(12)	-DB(12)
GROUND	+DB(13)	3	4	-DB(13)	-DB(13)
GROUND	+DB(14)	5	6	-DB(14)	-DB(14)
GROUND	+DB(15)	7	8	-DB(15)	-DB(15)
GROUND	+DB(P1)	9	10	-DB(P1)	-DB(P1)
GROUND	+DB(0)	11	12	-DB(0)	-DB(0)
GROUND	+DB(1)	13	14	-DB(1)	-DB(1)
GROUND	+DB(2)	15	16	-DB(2)	-DB(2)
GROUND	+DB(3)	17	18	-DB(3)	-DB(3)
GROUND	+DB(4)	19	20	-DB(4)	-DB(4)
GROUND	+DB(5)	21	22	-DB(5)	-DB(5)
GROUND	+DB(6)	23	24	-DB(6)	-DB(6)
GROUND	+DB(7)	25	26	-DB(7)	-DB(7)
GROUND	+DB(P)	27	28	-DB(P)	-DB(P)
GROUND	GROUND	29	30	GROUND	GROUND
GROUND	DIFFSENS	31	32	GROUND	GROUND
TERMPWR	TERMPWR	33	34	TERMPWR	TERMPWR
TERMPWR	TERMPWR	35	36	TERMPWR	TERMPWR
OPEN	OPEN	37	38	OPEN	OPEN
GROUND	GROUND	39	40	GROUND	GROUND
GROUND	+ATN	41	42	-ATN	-ATN
GROUND	GROUND	43	44	GROUND	GROUND
GROUND	+BSY	45	46	-BSY	-BSY
GROUND	+ACK	47	48	-ACK	-ACK
GROUND	+RST	49	50	-RST	-RST
GROUND	+MSG	51	52	-MSG	-MSG
GROUND	+SEL	53	54	-SEL	-SEL
GROUND	+C/D	55	56	-C/D	-C/D
GROUND	+REQ	57	58	-REQ	-REQ
GROUND	+I/O	59	60	-I/O	-I/O
GROUND	+DB(8)	61	62	-DB(8)	-DB(8)
GROUND	+DB(9)	63	64	-DB(9)	-DB(9)
GROUND	+DB(10)	65	66	-DB(10)	-DB(10)
GROUND	+DB(11)	67	68	-DB(11)	-DB(11)

CONTACT ASSIGNMENT TABLE

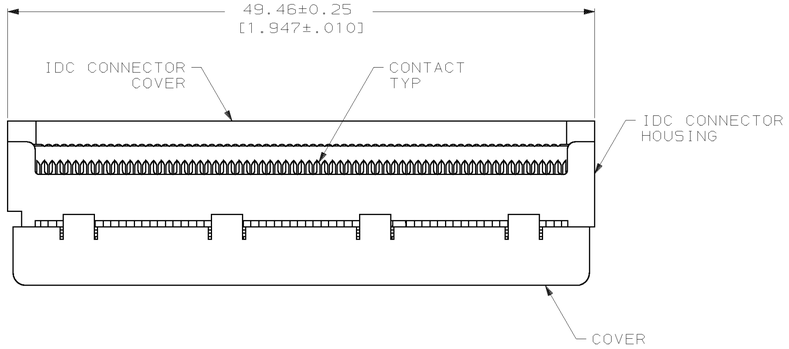

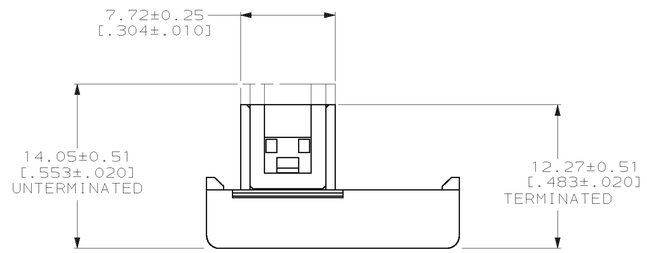

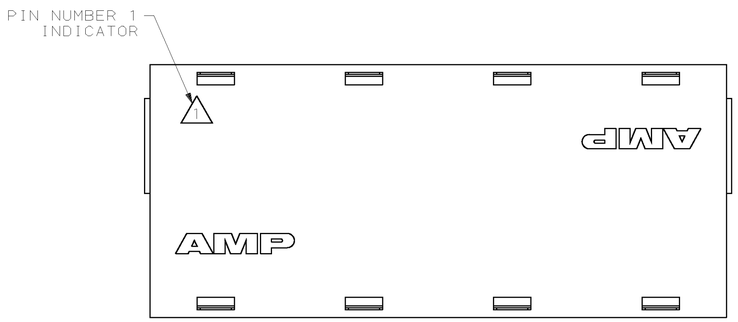

1. IDC/CONNECTOR HOUSING: LCP, BLACK, UL 94V-0 RATED.
   IDC/CONNECTOR COVER: POLYESTER, BLACK OR GREY, UL 94V-0 RATED.
   COVER: ABS, BLACK, UL 94V-0 RATED.
   CONTACTS: BERYLLIUM COPPER.
   PRINTED CIRCUIT BOARD: LAMINATED COPPER CLAD PLASTIC (FR-4, UL 94V-0).
2. CONTACTS: 2.54μm[.000100] MIN TIN-LEAD OVER 1.27μm[.000050] MIN NICKEL.
3. LOW VOLTAGE DIFFERENTIAL (LVD) TERMINATION CIRCUIT PER SP1-4 ELECTRICAL INTERFACE STANDARD.

1489998-1

PART NUMBER

THIS DRAWING IS A CONTROLLED DOCUMENT.

DIMENSIONS: mm [INCHES]

TOLERANCES UNLESS OTHERWISE SPECIFIED:
0 PLC ±-
1 PLC ±-
2 PLC ±-
3 PLC ±-
4 PLC ±-
ANGLES ±-

MATERIAL 1 FINISH 2

DWN E.C. CLAYBAUGH 14JAN03
CHK R.C.FOWLER 14JAN03
APVD R.C.FOWLER 15JAN03
PRODUCT SPEC –
APPLICATION SPEC –
WEIGHT –

AMP Incorporated
Harrisburg, PA 17105-3608

NAME
TERMINATOR, ULTRA 320 (SP1-4)
LVD/SE MULTIMODE .025CL IDC

SIZE	CAGE CODE	DRAWING NO	RESTRICTED TO
A1	00779	C- 1489998	–

CUSTOMER DRAWING

SCALE	SHEET	OF	REV
4:1	1	1	0