PROPRIETARY ITEM - EXCEPT FOR USES EXPRESSLY GRANTED IN WRITING INFORMATION DISCLOSED HEREON IS CONFIDENTIAL AND ALL RIGHTS PATENT AND OTHERWISE ARE RESERVED BY SOUTHCO, INC.

CONNECTOR WIRE

DATE	DRAWN	CHKD	SCALE	DRAWING NUMBER
11DEC2006	GGG		2:1	J-EM-10-40

MILLIMETERS

THIRD ANGLE PROJECTION

A3 PAPER SIZE

REV	DATE	DRAWN/CHKD	DESCRIPTION	PART NUMBER	MATERIAL	FINISH
A	11DEC2006	GGG/MJS	PRN: P2006-1802	EM-10-40	SEE NOTES	

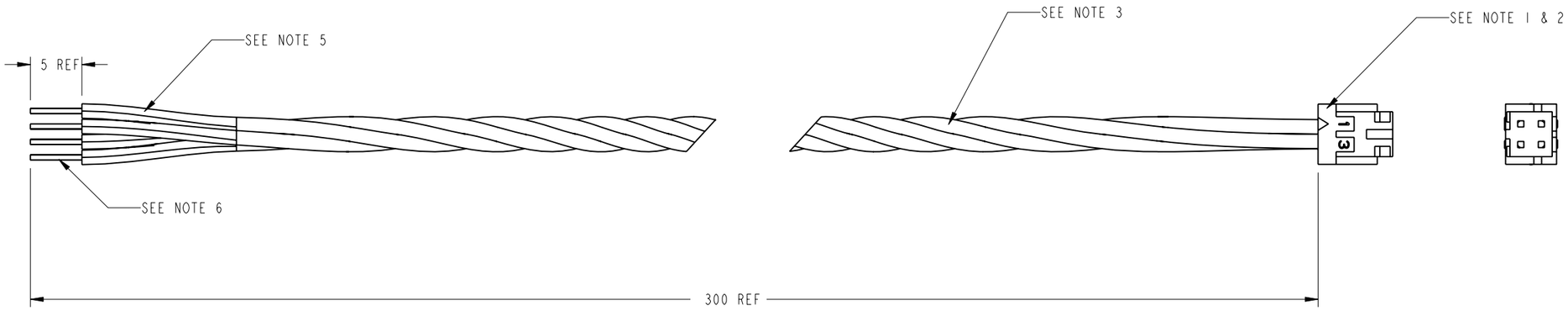

NOTES:
1. HOUSING:
   HIROSE ELECTRIC CO. LTD.
   CONNECTOR SOCKET 4POS 2MM DUAL CRIMP
   P/N DF11-4DS-2C
2. TERMINALS:
   HIROSE ELECTRIC CO. LTD.
   CRIMP SOCKET CONTACTS
   P/N DF11 SERIES CONTACTS, TIN PLATED.
3. WIRE:
   24 AWG STRANDED TINNED COPPER CONDUCTOR
   FLAMMABILITY: PASSES ULVW-1 FLAME TEST
   OPERATING TEMPERATURE: -40 TO +80C PER UL 1571
   PVC INSULATION,
   COLORS: RED, BLACK, WHITE, BLUE
4. CONNECTOR PINNOUT:
   PIN 1: WHITE
   PIN 2: RED
   PIN 3: BLUE
   PIN 4: BLACK
5. EACH WIRE END/COLOR SHALL HAVE THE FOLLOWING MARKERS:
   WHITE: 'IN'
   RED: '+ 12 V'
   BLUE: ' OUT'
   BLACK: 'GND'
6. WIRE ENDS ARE STRIPED AND TINNED THIS END.
7. MATERIALS COMPLY WITH ROHS DIRECTIVE.

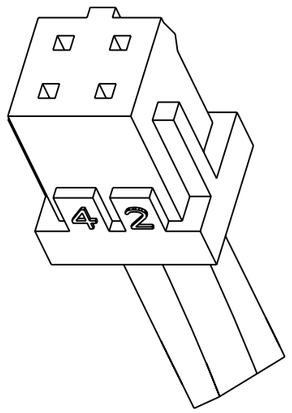

SCALE 5.000

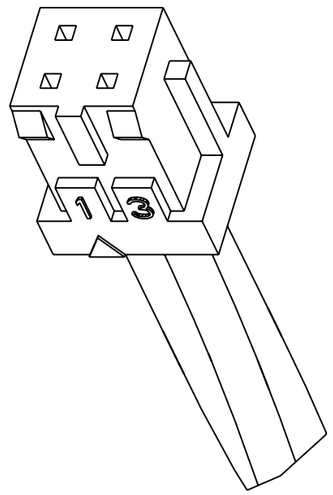

SCALE 5.000