REV	ECN NO	REVISIONS	DRN	CKD	APP	DATE
A	——	NEW RELEASE	TWC	TC	N.O.	9-22-05
B	——	UPDATED LED SPECS, ADDED RoHS COMPLIANT NOTE, ADDED ESD NOTE AND SYMBOL.	KLJ	NO	MES	2-15-08
C	——	UPDATE LED INT (3.55 & 42) WAS (2.24 &37) FOR 597230121 3F,202F	JTD	NO	MES	2-29-12

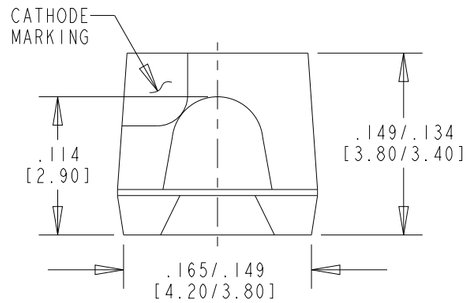

NOTES:

1. COLORLESS CLEAR WINDOW.
2. LED CHIP: InGaAlP
3. LED LEAD FINISH: PURE MATT TIN (Sn) 8.0±2.0 μm WITH NICKEL (Ni) UNDERLAYER OVER COPPER (Cu).
4. DIALIGHT PART NUMBERS: 597-2001-202F, -213F
   597-2301-202F, -213F
   597-2401-202F, -213F.
5. PACKAGING:
   -202F SUFFIX INDICATES 20 PCS SAMPLE STRIP
   -213F SUFFIX INDICATES 2000 PARTS/REEL ON 13" [330 mm] DIA. REEL
6. REEL AND PACKAGING HAS A LABEL WITH DIALIGHT LOGO, DIALIGHT P/N, QTY PER REEL, DATE CODE, LOT NUMBER, INTENSITY BIN CODE, COLOR BIN CODE, AND COUNTRY OF ORIGIN.
7. THIS ASSEMBLY CONTAINS ELECTROSTATIC DISCHARGE SENSITIVE DEVICES (ESDS). MAINTAIN ALL PRECAUTIONARY MEASURES DURING ASSEMBLY, HANDLING, AND STORAGE IN ACCORDANCE WITH IPC-A-610.

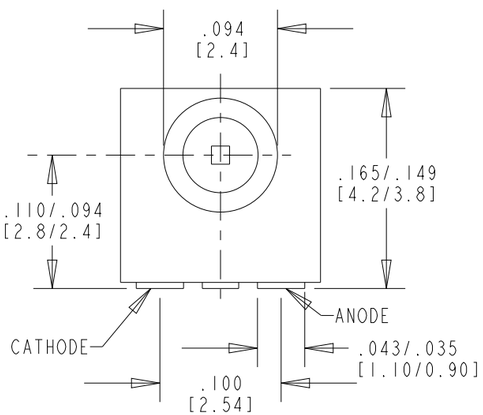

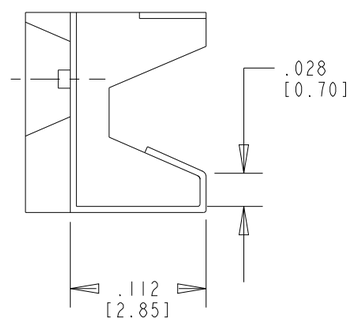

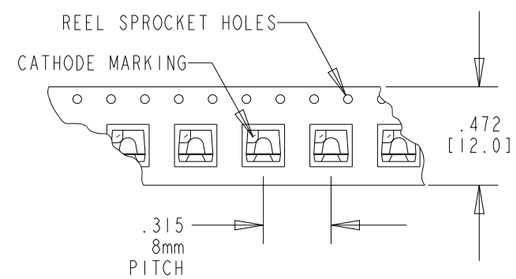

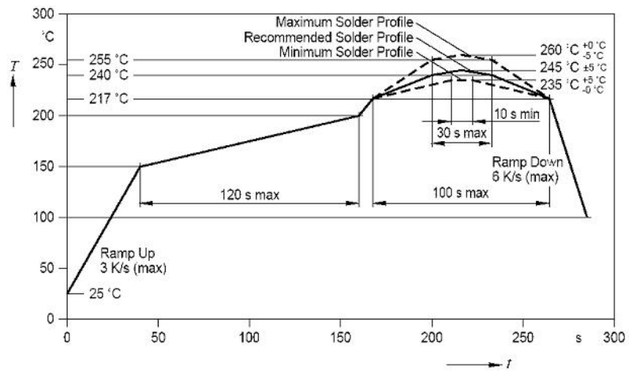

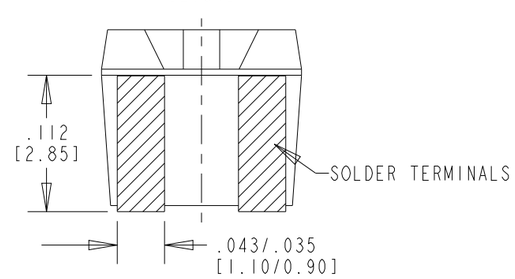

BI-COLOR OPERATING CHARACTERISTICS AT T_A = 25 °C AMBIENT															
DIALIGHT P/N	COLOR	FORWARD VOLTAGE (V) @ I_F = 10 mA			LUMINOUS INTENSITY (mcd) @ I_F = 2 mA			LUMINOUS INTENSITY (mcd) @ I_F = 10 mA			PEAK WAVELENGTH (nm)	DOMINANT WAVELENGTH (nm)			VIEWING ANGLE (2 θ 1/2)
		MIN.	TYP.	MAX.	MIN.	TYP.	MAX.	MIN.	TYP.	MAX.	TYP.	MIN.	TYP.	MAX.	
597-2001-213F, -202F	RED	1.7	1.8	2.2	4.5	7.8	11.2	20	40	60	643	624	630	636	120
597-2301-213F, -202F	GREEN	1.7	1.8	2.2	3.55	5.6	9.0	10	42	50	572	566	570	575	120
597-2401-213F, -202F	YELLOW	1.7	1.8	2.2	5.6	14.0	22.4	25	70	115	591	580	587	595	120

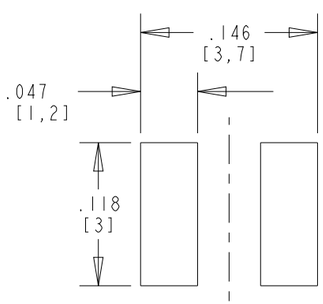

RECOMMENDED PAD LAYOUT

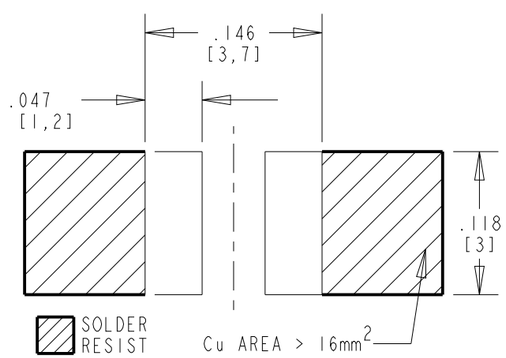

RECOMMENDED PAD LAYOUT
FOR IMPROVED HEAT DISSIPATION

ABSOLUTE MAXIMUM RATINGS AT 25°C AMBIENT	UNITS	RED	GREEN	YELLOW
POWER DISSIPATION	mW	45	40	45
CONTINUOUS FORWARD CURRENT	mA	20		
PEAK FORWARD CURRENT t_P < 10 μS, D=.005	mA	100		
REVERSE VOLTAGE @ 10 μA	V	12		
SOLDERING TEMPERATURE, 10 SEC.	°C	260		
OPERATING TEMPERATURE	°C	-40 TO +100		
STORAGE TEMPERATURE	°C	-40 TO +100		

ATTENTION:
OBSERVE PRECAUTIONS FOR HANDLING ELECTROSTATIC SENSITIVE DEVICES

RoHS COMPLIANT 597-2X01-2XXF

Part Numbers with the "F" suffix ending are RoHS Compliant.
For example: 597-2401-207F
Reel and bag packaging are marked with "RoHS Compliant" label or equivalent markings. These parts can be used with RoHS reflow profile. Parts can be wave soldered, dip soldered or hand soldered using typical lead-free soldering process with max 260°C temp. for 10 sec.

THIS DRAWING AND THE CONTENTS HEREIN ARE CONFIDENTIAL AND THE SOLE PROPERTY OF DIALIGHT. REPRODUCTION OF THIS DRAWING OR CONSTRUCTION OF ANY PARTS WITHIN THIS DRAWING ARE FORBIDDEN WITHOUT THE WRITTEN CONSENT OF DIALIGHT.

SCALE: DRAWING SCALE
ALL DIM'S IN: INCHES (MM)
TOLERANCES: UNLESS OTHERWISE SPECIFIED
FRACTIONS: ±1/64
DECIMALS (.XX): ±.01
DECIMALS (.XXX): ±.005
DECIMALS (.XXXX): ±.0005
ANGLES: ±1°
FINISH:
FSCM 83330

DRAWING NUMBER C-17300
REV C
TITLE SMT-SIDELED RoHS COMPLIANT
MATERIAL

Dialight
1501 ROUTE 34 SOUTH
FARMINGDALE, NJ 07727

SHEET 1 OF 1
FAMILY TABLE: