GENERAL CHARACTERISTICS : SEE DRAWING C01-8639-0000

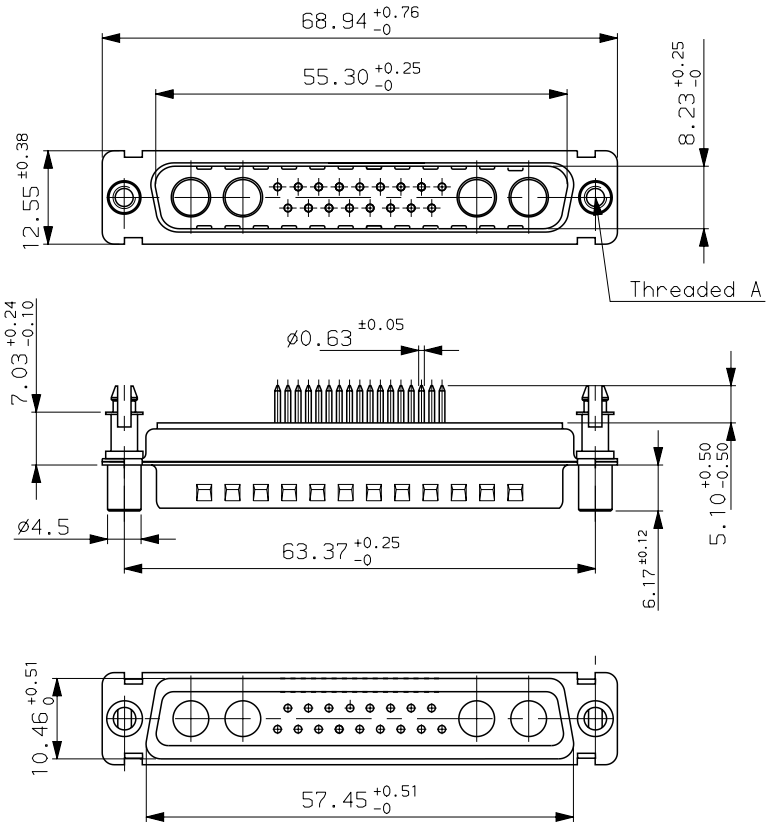

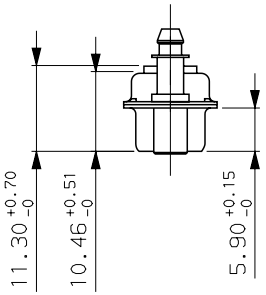

DCV21WA4P300G00	UNC 4.40
DCI21WA4P300G00	M3
PART NUMBER	Threaded A

LAYOUT DIMENSIONS (after plating)

CONNECTOR SIDE VIEW

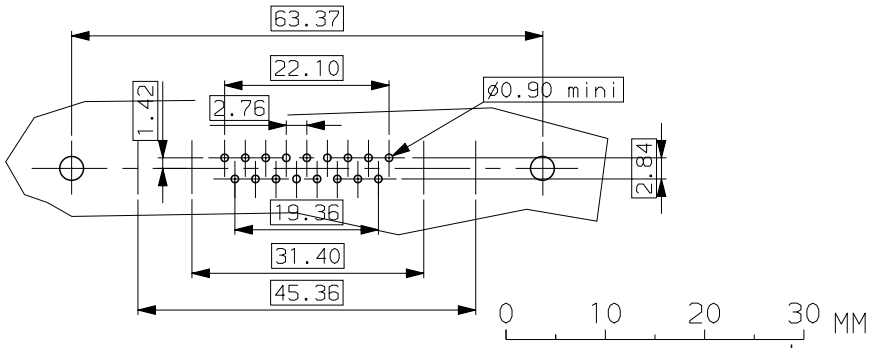

ISS	DATE	Latest modification by : DEBRAY.T	MOD N°
b	01/10/03	update --	--

Designed by: JARRY date 25/01/01 Type of drawing: CLIENT

TITLE : PIN CONNECTOR WITH POWERS CONTACTS

SCALE: 1.5

SHEET 1/1

FCI FRAMATOME GROUP

FRAMATOME CONNECTORS FRANCE
Rue Louis Breguet - BP 05
72024 LE MANS Cedex
Tel. (33)02.43.78.34.00

This document is the property of FRAMATOME CONNECTORS FRANCE
It must not be reproduced or communicated without permission in writing from the owners

FORMAT A3

DRG N° C01-8639-1851

PROJECT M94D001

PDM: Rev:B STATUS:Released Printed: Mar 02, 2004