used for:

SCHEMATIC	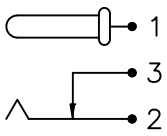
MODEL NO	C

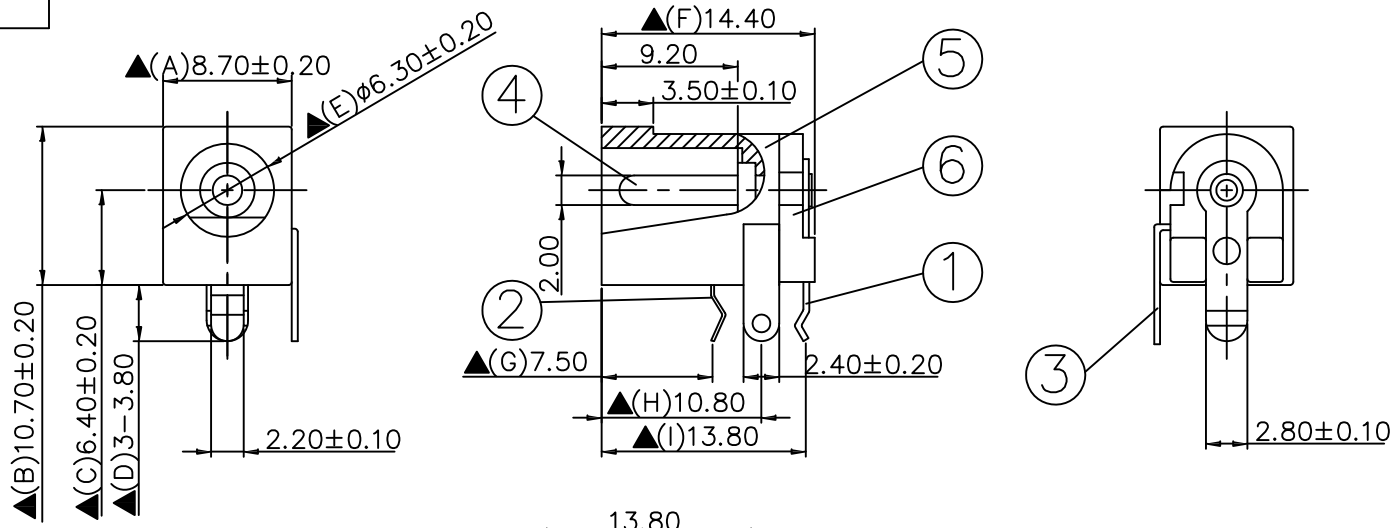

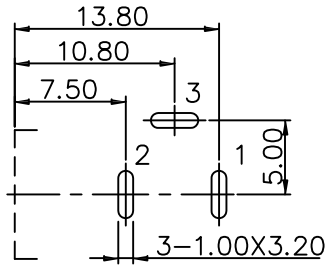

Pin Hole Layout
(Jack Bottom View)

NO.	Description	Material	Q'TY	Finish
6.	Cover	PBT+30% Fibre Glass	1	Black Color
5.	Housing	PBT+30% Fibre Glass	1	Black Color
4.	Pin(2.0ø)	Copper	1	Nickel Plated
3.	Break Terminal	0.4T Brass	1	Silver Plated
2.	Sleeve Spring	0.2T Phosphor Bronze	1	Silver Plated
1.	Pin Terminal	0.4T Brass	1	Silver Plated

SPECIFICATIONS:

Contact Resistance	: 30mΩ max
ⓑCurrent Rating	: Max 5.0A , 24V DC
Insulation Resistance	: 100MΩ min. at DC 500V
Dielectric Withstand Voltage	: AC 500V for one minute

▲(A -I) are important Dimensions

Directive 2002/95/EC
„RoHS"
Compliant

THIS DRAWING MAY NOT BE COPIED OR REPRODUCED IN ANY WAY, AND MAY NOT BE PASSED ON TO A THIRD PARTY WITHOUT WRITTEN PERMISSION. OWNERSHIP AND COPYRIGHT OF CONEC CORPORATION.

DO NOT ALTER CAD DRAWING BY HAND

rev.	description	date	name
b		Jan/10/2013	Robert
a	Original		

CONEC CORPORATION
Brampton, Ontario

tolerance unless otherwise specified
Decimal: .x ±0.3 .xx ±0.3
Angles:
Dim. in mm

	date	name
2005		
draw.	April. 27	Vincent Ke
appd.	April. 27	J. Chaudry
norm		
d-old		

CONEC®

scale:
material: SEE SPECIFICATIONS
title: DC POWER JACK (OD: 2.00mm)
drawing no.: C0504R06A
AutoCAD 2004
DIN A3
sheet 1/1
part no.: 33DCJ-0202-A