REVISION RECORD		
REV	DESCRIPTION	DRFT

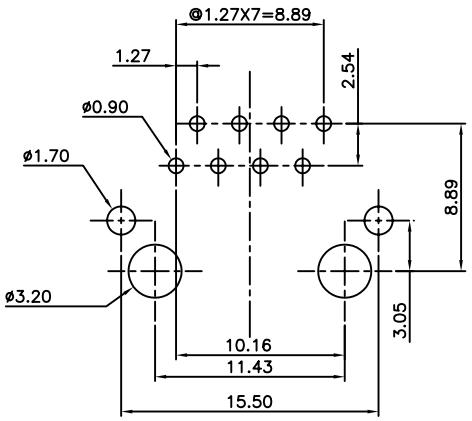

PC BOARD LAYOUT T=1.60mm
COMPONENT SIDE SHOWN
TOLERANCES±0.05mm

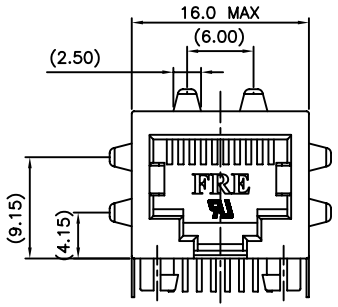

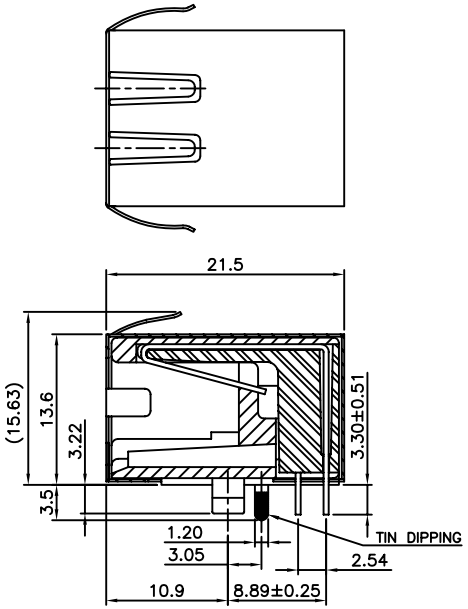

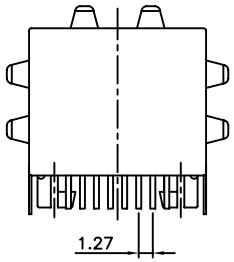

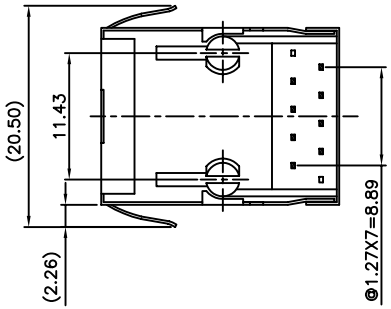

NOTES:

ELECTRICAL:

1. VOLTAGE RATING : 125 VAC RMS MIN.
2. CURRENT RATING : 1.5 AMP MIN.
3. CONTACT RESISTANCE : 45 MILLIOHMS MAX.
4. INSULATION RESISTANCE: 1000 MEGOHMS MIN @ 500 VDC.
5. DIELECTRIC STRENGTH : 1000 VDC RMS 60Hz, 1MIN.

MECHANICAL:

1. HOUSING MATERIAL : GLASS FIBER FILLED NYLON. UL94V-0\BLACK.
2. CONTACT MATERIAL : PHOSPHOR BRONZE t=0.35mm
3. SHIELD MATERIAL : COPPER ALLOY WITH NICKEL PLATING.
4. PLATING : GOLD PLATING OVER NICKEL.
5. OPERATING LIFE : 750 CYCLES MIN.
6. PCB RETENTION PRE-SOLDER : 1 LB MIN.
7. PCB RETENTION POST-SOLDER: 10 LBS MIN.

ENVIRONMENTAL:

1. STORAGE : -40°C TO +85°C.
2. OPERATION: -40°C TO +85°C.
3. WAVE SOLDER TEMPERATURE : 255°C~265°C (5~10 SECONDS).

MATES WITH MODULAR PLUG CONFORMING TO
FCC PART 68, SUBPART F.
CUL FILE NO. E163191

E5908-LEJ744-L	30u"
PART NO.	Au PLATING

DETACHED LISTS

MM (INCH)

TOLERANCES EXCEPT AS NOTED

MM	
.0 ± 0.25	±
.00 ± 0.20	±
.000 ± 0.10	±

ANGLES ± 1°

THIRD ANGLE PROJECTION

RoHS Compliant

Pulse Electronics

TITLE

CONTACT

20.57 PCB JACK 8P

DFTO :	ELLA	DRAWING NO.	CE5908-LEJ74X-L
DATE :	09/17/2012	/PART NO.	E5908-LEJ744-L
SCALE :	2:1	DO NOT SCALE DRAWING	

SIZE A3 | REV 0

SHEET 1 OF 1