THIS COPY IS PROVIDED ON A RESTRICTED BASIS AND IS NOT TO BE USED IN ANY WAY DETRIMENTAL TO THE INTERESTS OF PANDUIT CORP.

PANDUIT P/N	WEIGHT
CM35MSC**	.08 LB/10 PCS (37.5 g/10 PCS)

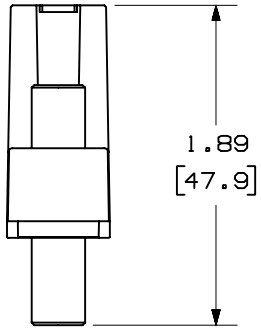

NOTES:
1. SEE CURRENT CATALOG FOR ADDITIONAL PART NUMBER SUFFIXES TO INDICATE COLOR AND OR PACKAGE QUANTITY.
2. SEE CATALOG FOR COMPLETE LIST OF PARTS APPLICABLE FOR USE WITH THIS PART.
3. DIMENSIONS IN PARENTHESES ARE IN METRIC.
4. PART INCLUDES:
   1- MODULE BASE
   1- 3.5mm(1/8") HEAD PHONE JACK COUPLER (ASSEMBLED TO MODULE BASE)

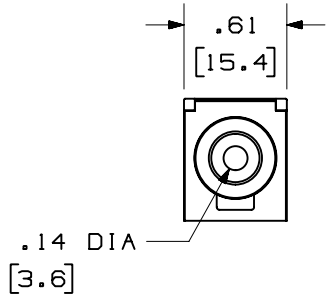

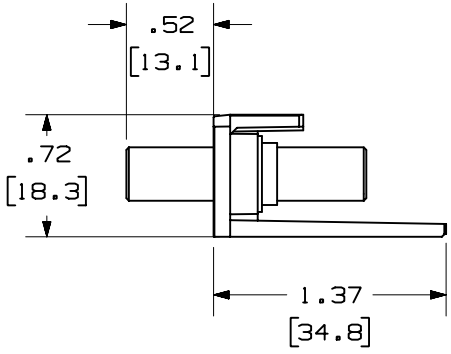

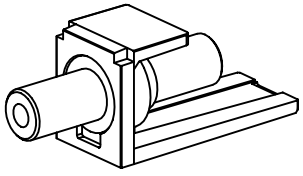

REV	DATE	BY	CHK	DESCRIPTION	ECN - R	CUST	SUP	OTH
R	1-12-05	JsP		RELEASED TO PRODUCTION	02109-04			

MODEL FILENAME: M02109AA_CM35MSC_00.PRT
DRAWING FILENAME: M02109AA_DC_00A.PRT
SIZE: A

MINI-COM 3.5mm (1/8") HEAD PHONE JACK COUPLER MODULE CUSTOMER DRAWING

PANDUIT™ CORP.
TINLEY PARK, ILL 60477

THIRD ANGLE PROJECTION

ALL DIMENSIONS ARE GIVEN IN INCHES, UNLESS OTHERWISE SPECIFIED.
DIMENSIONAL TOLERANCES ARE:
(.X) ± (.XXX) ±.010(.3)
(.XX) ±.03(.8) ANGLES ±

DRAWN BY: JsP
DATE: 1-12-05
CHK'D:

MATERIAL:
MODULE: ABS
CONNECTOR: ZINC PLATED STEEL

I.I. NUMBER: N/A
PRODUCT SPEC: N/A
WORK INSTRUCTION: N/A
SCALE: NONE
PART NO.: CM35MSC**
DRAWING NO.: 02109-04