THIS DRAWING IS UNPUBLISHED. RELEASED FOR PUBLICATION -
© COPYRIGHT 20 BY - ALL RIGHTS RESERVED.

REVISIONS

P	LTR	DESCRIPTION	DATE	DWN	APVD
	A	ADD INFORMATION - UPDATED	03NOV2000	JL	JLQ
	B	CHANGE SPS MATERIAL	10OCT2001	SG	JLQ
	C	MODIFY MATERIAL TYPE IN TABLE	27FEB2009	SG	JL
	D	NEW P/N 1-1379114-1 FOR SPECIFIC PACKAGING	21JAN2015	NT.N	JL

RECOMMANDATION DECOUPE PANNEAU
RECOMMENDED PANEL CUTOUT

VUE DE DESSUS / VIEW FROM TOP

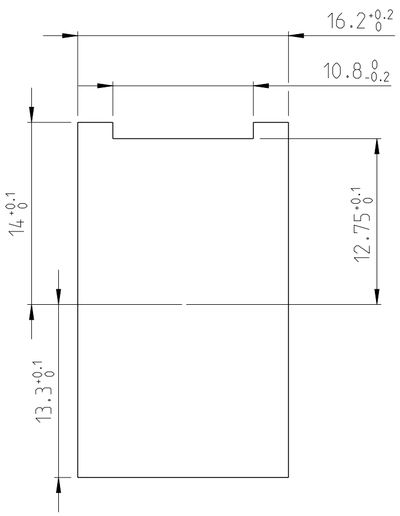

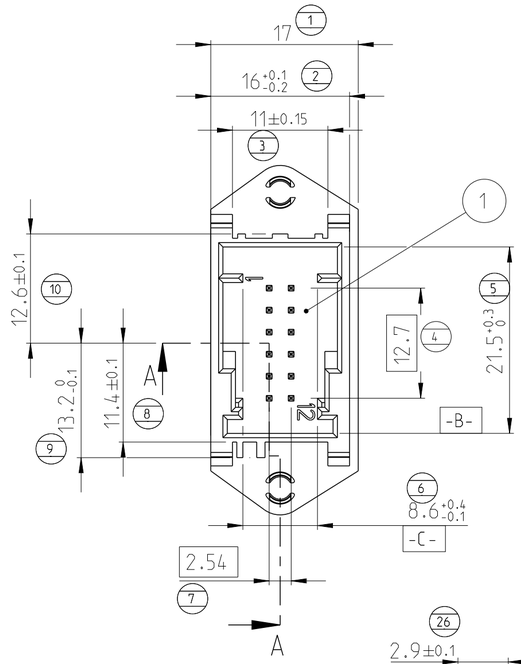

SECTION A-A
(COUPE)

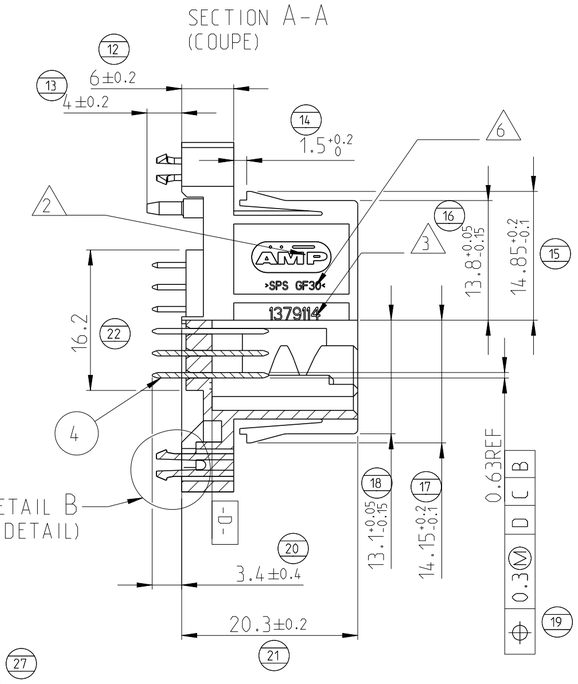

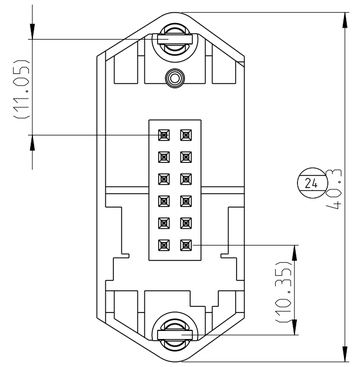

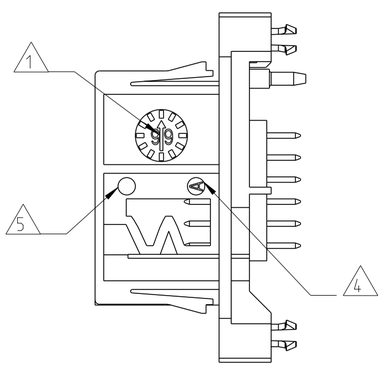

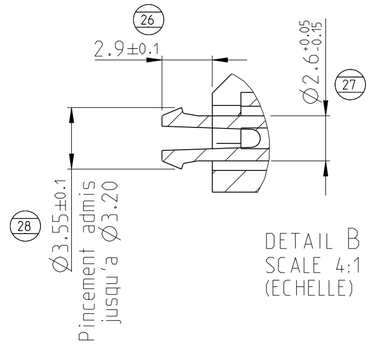

DETAIL B
SCALE 4:1
(ECHELLE)

1. DATE CODE
2. TE LOGO
   LOGO DE TE
3. ASSY PART NUMBER
   REFERENCE DU PRODUIT ASSEMBLE
4. REVISION STATUS
   REVISION DU MOULE
5. CAVITY MARKING
   N° D'EMPREINTE DU MOULE
6. NO CONTRACTUAL MARKING
   MARQUAGE NON CONTRACTUEL
7. MATING PART :
   CONNECTORS PN 185341 AND 185343
   CONTRE PARTIE :
   CONNECTEURS REF 185341 AND 185343

RECOMMANDATION IMPLANTATION CI
RECOMMENDED PCB DETAILS

VUE DE DESSUS / VIEW FROM TOP

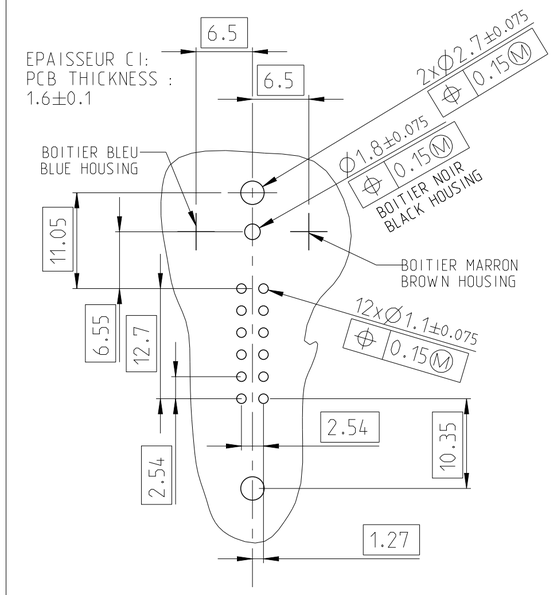

DETROMPAGES / CODINGS

SCALE 1:1
(ECHELLE)

1379114-1
NOIR / BLACK

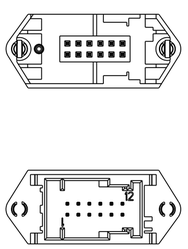

1379114-2
BLEU / BLEU

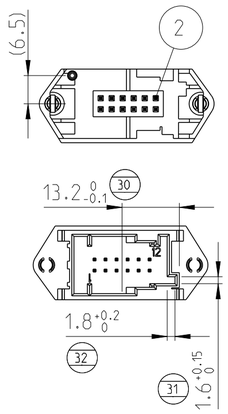

1379114-3
MARRON / BROW

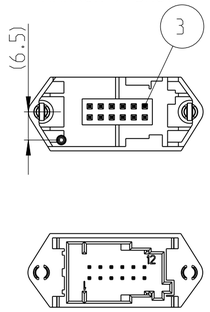

REF / ASSY PN								
	1379114-1	1379114-2	1379114-3	1-1379114-1				
				X	D PACKAGING SPECIFIC IN TRAY WITH STRAP / CONDITIONNEMENT EN PLATEAU SPECIFIQUE AVEC COURROIE			
	12	12	12	12	CuSn6	CONTACT MQS 0.63x0.63	POST ETAME / POST TIN	4
	-	-	1		SPS GF20	BOITIER / HOUSING	MARRON / BROWN	3
	-	1			SPS GF20	BOITIER / HOUSING	BLEU / BLUE	2
	1	-		1	SPS GF20	BOITIER / HOUSING	NOIR / BLACK	1
	QTY				MATERIAL	DESIGNATION / NAME	COULEUR / COLOR	REP.

THIS DRAWING IS A CONTROLLED DOCUMENT.

DIMENSIONS: mm

TOLERANCES UNLESS OTHERWISE SPECIFIED:
0 PLC ± -
1 PLC ± -
2 PLC ± 0.3
3 PLC ± -
4 PLC ± -
ANGLES ± 5°

MATERIAL - -

FINISH SEE TABLE -

DWN	J. DREUX	25APR2000
CHK	J. LAQUERBE	25APR2000
APVD	JJ. REVIL	25APR2000
PRODUCT SPEC	108-15180	
APPLICATION SPEC	-	
WEIGHT	3.7 g	

TE Connectivity

NAME: 12W MQS HEADER WITH /WITHOUT BOARD-LOCKS EMBASE 12V MQS AVEC/SANS B-LOCKS

SIZE	CAGE CODE	DRAWING NO	RESTRICTED TO
A2	-	C- 1379114	-

Customer Drawing | SCALE 2:1 | SHEET 1 OF 1 | REV D

1471-9 (3/13)