MALLORY Mallory Sonalert Products Inc.	Part # SC628MA
Sales Outline Drawing	Revision A

Specifications: Military Unit

Sound level Category	Medium Sound Level
Mode of Operation	Continuous
Mounting	Panel (see note B)
Voltage Rating	6 to 28 Vac/dc
Frequency	2900 Hz ±500 Hz
Loudness (Min. Voltage)	70 dB(A) min. @ 2 FT and 6 Vac/dc
Loudness (Max Voltage)	85 dB(A) min. @ 2FT and 28 Vac/dc
Current Draw	4.0 mA Max @ 6 Vac/dc
Current Draw	21.5 mA Max @ 28 Vac/dc
Storage Temperature	-65°C to +85°C
Operating Temperature	-40°C to +85°C
Weight (Typical)	2.1 oz (59 g)
Housing	6/6 Nylon, Color Black
Options	For other options contact factory

Dimensions: Inches (mm)

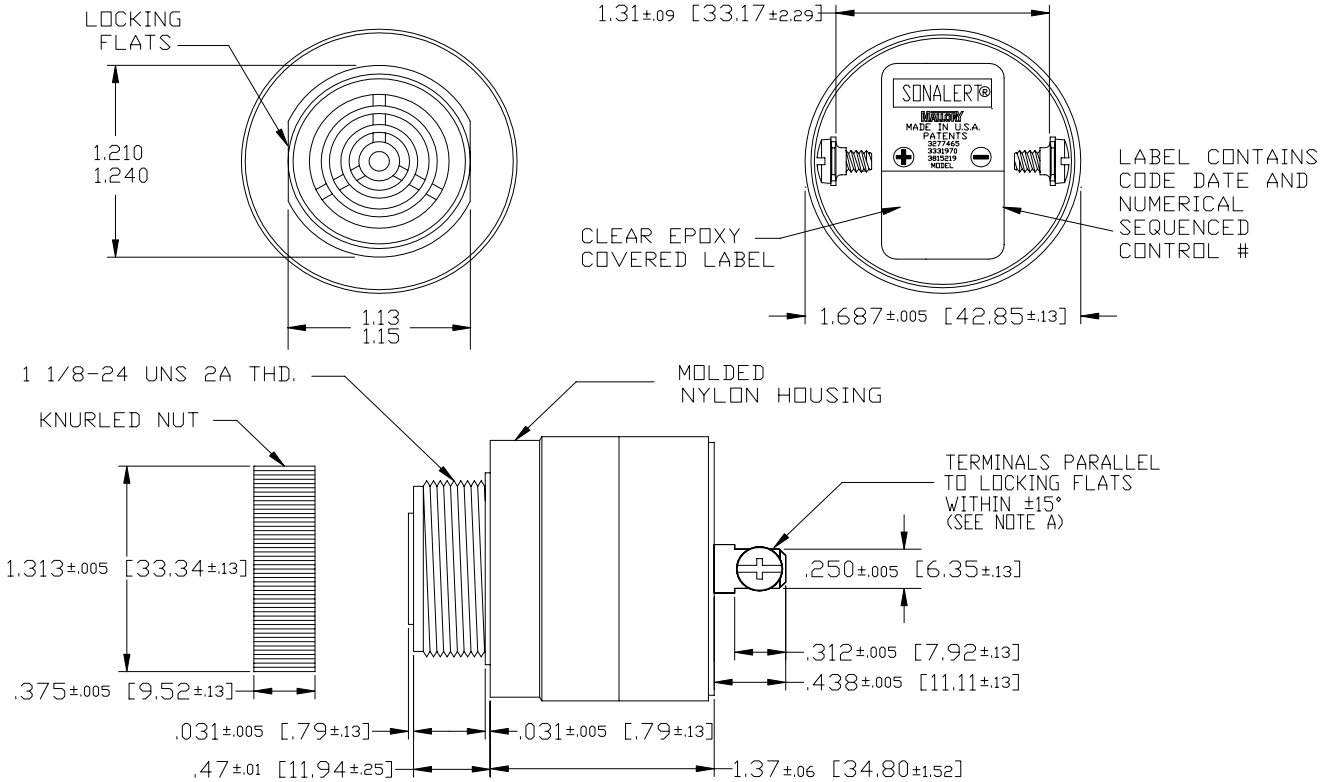

NOTE A: TERMINALS-.032 BRASS TIN PLATED, TAPPED FOR #6-32 SCREW. TWO #6-32 NICKEL PLATED BRASS SCREWS INCLUDED. WILL ACCEPT 1/4" QUICK CONNECT.

NOTE B: MOUNTING- REMOVE KNURLED NUT AND INSERT THREADED FRONT THROUGH 1.25" HOLE PUNCHED IN PANEL, IF ORIENTATION IS NEEDED, NOTE LOCKING FLATS ON DRAWING. SCREW NUT BACK ON. DO NOT OVERTIGHTEN.

4411 South High School Road, Indianapolis, Indiana 46241 U.S.A • Phone: (317)612-1000 Fax: (317)612-1010 • www.mallory-sonalert.com