MB91570 Series

32-bit Microcontroller

This series is Cypress 32-bit microcontroller designed for automotive and industrial control applications. It contains the FR81S CPU that is compatible with the FR family. The FR81S has a high level performance among the Cypress FR family by enhancing CPU instruction pipeline and load store processing, and improving internal bus transfer.

It is best suited for application control for automotive.

Features

FR81S CPU Core

- 32-bit RISC, load/store architecture, 5-stage pipeline
- Maximum operating frequency: 80 MHz (Source oscillation = 4.0 MHz and 20 multiplied (PLL clock multiplication system))
- General-purpose register : 32-bit ×16 sets
- 16-bit fixed length instructions (basic instruction), 1 instruction per cycle
- Instructions appropriate to embedded applications
  - Memory-to-memory transfer instruction
  - Bit processing instruction
  - Barrel shift instruction etc.
- High-level language support instructions
  - Function entry/exit instructions
  - Register content multi-load and store instructions
- Bit search instructions
  - Logical 1 detection, 0 detection, and change-point detection
- Branch instructions with delay slot
  - Decrease overhead during branch process
- Register interlock function
  - Easy assembler writing
- Built-in multiplier and instruction level support
  - Signed 32-bit multiplication : 5 cycles
  - Signed 16-bit multiplication : 3 cycles
- Interrupt (PC/PS saving)
  - 6 cycles (16 priority levels)
- The Harvard architecture allows simultaneous execution of program and data access.
- Instruction compatibility with the FR family
- Built-in memory protection function (MPU)
  - Eight protection areas can be specified commonly for instructions and the data.
  - Control access privilege in both privilege mode and user mode.
- Built-in FPU (floating point arithmetic)
  - IEEE754 compliant
  - Floating-point register 32-bit × 16 sets

Peripheral Functions

- Clock generation (equipped with SSCG function)
  - Main oscillation (4MHz)
  - Sub oscillation (32kHz) or no sub oscillation
  - PLL multiplication rate : 1 to 20 times
- Built-in Program flash memory capacity
  - MB91F575 : 512 + 64KB
  - MB91F577 : 1024 + 64KB
  - MB91F578 : 1536 + 64KB
  - MB91F579 : 2048 + 64KB
- Built-in Data flash memory (WorkFlash) capacity 64KB
- Built-in RAM capacity
  - Main RAM

    MB91F575 : 40KB

    MB91F577 : 64KB

    MB91F578 : 96KB

    MB91F579 : 128KB
  - Backup RAM

    MB91F575/7 : 8KB

    MB91F578/9 : 16KB
- General-purpose ports

  [LQFP-144]
  - 111 (none sub oscillation), 109 (with sub oscillation)
  - Included I^2C pseudo open drain ports : 4
  - P057 : Input only

  [LQFP-208]
  - 159 (none sub oscillation), 157 (with sub oscillation)
  - Included I^2C pseudo open drain ports : 4
  - P057 : Input only
- External bus interface
  - 22-bit address, 16-bit data
  - 23 pins of 9-bit address, 8-bit data, ASX, CS0X, CS1X, RDX, WR0X, and WR1X can select 5V/3.3V by the VCCE power supply
- DMA Controller
  - Up to 16 channels can be started simultaneously.
  - 2 transfer factors (Internal peripheral request and software)

- A/D converter (successive approximation type)
  - 8/10-bit resolution : 40 channels
  - Conversion time : 3μs
- D/A converter (R-2R type)
  - 8-bit resolution : 2 channels
- External interrupt input: 16 channels
  - Level ("H" / "L"), or edge detection (rising or falling) enabled
- LIN-UART
  - 6 channels, ch.2 to ch.7
  - Selectable from UART, synchronous mode or LIN-UART mode
  - LIN protocol Revision 2.1 supported (LIN-UART).
  - SPI(Serial Peripheral Interface) supported (synchronous mode)
  - Full-duplex double buffering system
  - LIN synch break detection (linked to the input capture)
  - Built-in dedicated baud rate generator
  - DMA transfer support
- Multi-function serial communication (built-in transmission/reception FIFO memory) : 4 channels

< UART (Asynchronous serial interface) >

- Full-duplex double buffering system, 16-byte transmission FIFO memory, 16-byte reception FIFO memory
- Parity or no parity is selectable.
- Built-in dedicated baud rate generator
- The external clock can be used as the transfer clock
- Parity, frame, and overrun error detect functions provided
- DMA transfer support

<CSIO (Synchronous serial interface) >

- Full-duplex double buffering system, 16-byte transmission FIFO, memory, 16-byte reception FIFO memory
- SPI supported; master and slave systems supported; 5 to 9-bit data length can be set.
- Built-in dedicated baud rate generator (Master operation)
- The external clock can be entered. (Slave operation)
- Overrun error detection function is provided
- DMA transfer support

<LIN-UART (Asynchronous Serial Interface for LIN) >

- Full-duplex double buffering system, 16-byte transmission FIFO memory, 16-byte reception FIFO memory
- LIN protocol revision 2.1 supported
- Master and slave systems supported
- Framing error and overrun error detection
- LIN synch break generation and detection; LIN synch delimiter generation
- Built-in dedicated baud rate generator
- The external clock can be adjusted by the reload counter
- DMA transfer support

< I^2C >

- Full-duplex double buffering system, 16-byte transmission FIFO memory, 16-byte reception FIFO memory
- Standard mode (Max. 100kbps) / high-speed mode (Max. 400kbps) supported
- DMA transfer supported (for transmission only)
- I^2C supporting I/O (for ch.0 and ch.1 only)

- CAN Controller (C-CAN) : 3 channels
  - Transfer speed : Up to 1Mbps
  - 64-transmission/reception message buffering : 1 channel, 32-transmission/reception message buffering : 2 channels
- PPG : 16-bit × 24 channels
- Reload timer : 16-bit × 7 channels(3 channels are for regular timer interrupt generation.)
- Free-run timer :
  32-bit × 6 channels (Can select each channel for input capture, output compare)
- Input capture :
  32-bit × 12 channels (linked to the free-run timer)
- Output compare : 32-bit × 12 channels (linked to the free-run timer)
- Sound generator : 5 channels
  - Frequency and amplitude sequencers provided
- Stepping motor controller : 6 channels
  - 8/10-bit PWM
  - High current output supported (4 lines × 6 channels)
  - Can refer back electromotive force using pin-shared A/D converter
- LCD controller
  - Common output : 4 , Segment output : 32
  - Duty drive (SEG0 to SEG31) and static drive (ST0 to ST8) can be switched.
  - Each of COM0 to COM3, SEG0 to SEG31, V0, V1, V2, and V3 pins for duty drive can be switched to the general-purpose port. (The SEG23 to SEG31 pins can be switched to static driving.)
  - V0, V1, V2 and V3 pin can be used as the general-purpose port. But V3 pin cannot be used as an output pin.
  - Each of ST0 to ST8 pins for static drive can be switched to the general-purpose port, or it can be switched to the segment output of duty drive.
  - MB91F575/7: The amplitude of the SEG0 to SEG22 output is determined by the VCC5 power supply pin or by the V3 pin even if VCCE pin is supplied to 3.3V.
  - MB91F578/9: The voltage VCCE or less can be supplied to V3 pin. It is prohibited that VCC5 being chosen as LCDC reference voltage by software.
- Up/Down counter: 2 channels
  - 8/16-bit up/down counter
- Real-time clock (RTC) (for day, hours, minutes, seconds)
  - Main oscillation / sub oscillation frequency can be selected for the operation clock

- Calibration: A hardware watchdog of the CR oscillation drive and real-time clock (RTC) of the sub clock drive
  - The CR oscillation frequency can be trimmed
  - The main clock to sub clock ratio can be corrected by setting the real-time clock prescaler
- Clock Supervisor
  - Monitoring abnormality (damage of crystal etc.) of sub oscillation (32kHz) (dual clock products) and main oscillation (4 MHz)
  - When abnormality is detected, it switches to the CR clock.
- Base timer : 2 channels
  - 16-bit timer
  - Any of four PWM/PPG/PWC/reload timer functions can be selected and used.
  - As for the functions of PWC and reload timer, 2 channels of cascade mode can be used as 32-bit timer.
- CRC generation
- HS-SPI
  Note: In this series, the HS-SPI function is prohibited
  - E^2PROM and the flash device of the Single/Dual/Quad-SPI protocol can be connected.
  - The power supply of 5V/3.3V supplied to the VCCE power supply pin is used.
  - Maximum 16MHz (Maximum 8 MHz at the slave.)
- Watchdog timer
  - Hardware watchdog
  - Software watchdog
- NMI
- Interrupt controller
- Interrupt request batch read
  - Multiple interrupts from peripherals can be read by a series of registers.
- I/O relocation
  - Peripheral function pins can be reassigned.
- Low-power consumption mode
  - Sleep / Stop / Watch / Sub RUN mode
  - Stop (power shutdown) / Watch (power shutdown) mode
- Power on reset
- Low-voltage detection reset (external low-voltage detection)
- Low-voltage detection reset (internal low-voltage detection)
- Device Package :
  - LQFP-144 for MB91F575/7/8/9
  - LQFP-208 for MB91F578/9
- CMOS 90nm Technology
- Power supplies
  - 5V Power supply
  - The internal 1.2V is generated from 5V with the voltage step-down regulator.
  - I/O port uses the power supply of 5V/3.3V supplied to the VCCE power supply pin.
    - LQFP-144: P010 to P017, P020 to P027, and P030 to P036
    - LQFP-208: P140 to P147, P150 to P157, P160 to P167, P170 to P177, P180 to P187, and P190 to P197

Contents

1. Product Lineup **6**
2. Pin Assignment (LQFP-144) **12**
3. Pin Assignment (LQFP-208) **13**
4. Pin Description (LQFP-144) **14**
5. Pin Description (LQFP-208) **30**
6. I/O Circuit Type **44**
7. Handling Precautions **50**
7.1 Precautions for Product Design 50
7.2 Precautions for Package Mounting 51
7.3 Precautions for Use Environment 52
8. Handling Devices **53**
9. Block Diagram **56**
10. Memory Map **57**
11. I/O Map **61**
12. Interrupt Vector Table **102**
13. Electrical Characteristics **105**
13.1 Absolute Maximum Ratings 105
13.2 Recommended operating conditions 107
13.3 DC characteristics 108
13.4 AC Characteristics 115
13.4.1 Main Clock Timing 115
13.4.2 Sub clock timing (products without s-suffix) 116
13.4.3 Reset Input 119
13.4.4 Power-on Conditions 120
13.4.5 Multi-function Serial 121
13.4.6 LIN-UART timing 132
13.4.7 Timer input timing 138
13.4.8 Trigger input timing 138
13.4.9 NMI input timing 139
13.4.10 Low voltage detection (External low-voltage detection) 139
13.4.11 Low voltage detection (Internal low-voltage detection) 140
13.4.12 High current output slew rate 140
13.4.13 Clock output timing 141
13.4.14 External bus I/F (synchronous mode) timing 142
13.4.15 External bus I/F (Asynchronous mode) timing 145
13.4.16 External bus I/F (ready) timing 148
13.4.17 HS-SPI timing 149
13.5 A/D Converter 151
13.5.1 Electrical Characteristics 151
13.5.2 Definition of A/D Converter Terms 152
13.5.3 Notes on Using A/D Converter 153
13.6 D/A converter 154
13.7 Flash memory 155
13.7.1 Electrical characteristics 155
13.7.2 Notes 155

14. Ordering Information **156**
15. Package Dimensions **158**
16. Major Changes **161**
Document History **162**

1. Product Lineup

Item / Product	MB91F575B(S)/C(S)	MB91F575BH(S)/CH(S)
System Clock	On chip PLL Clock multiple method	
Minimum instruction execution time	Around 12.5ns (80MHz)	
Sub clock	Yes(Non-S series) No(S series)	
FLASH Capacity (Program)	512 + 64KB	
FLASH Capacity (Work)	64KB	
RAM	40KB + 8KB	
BI-ROM	4KB	
GDC	None	
External BUS I/F	Address : 22-bit Data :16-bit (Part of the External BUS I/F pins can select the power supply 5V or 3.3V)	
DMA Controller	16 channels	
Base Timer(16bit)	2 channels	
Free-run Timer(32bit)	6 channels	
Input capture(32bit)	12 channels	
Output Compare(32bit)	12 channels	
Reload Timer(16bit)	7 channels	
PPG timer(16bit)	24 channels	
Up/down Counter	2 channels	
Clock Supervisor	Yes	
D/A converter	2 channels	
External Interrupt	16 channels	
A/D converter (8bit/10bit)	40 channels	
LIN-UART	6 channels	
Multi-Function serial communication	4 channels[*1]	
HS-SPI	Yes Up to 16MHz Note: In this series, the HS-SPI function is prohibited.	
LCD Controller	32seg × 4com(Static drive 8seg × 1com)	
CAN	64msg × 1 channel / 32msg × 2 channels	
Stepping Motor Controller	6 channels	

Item / Product	MB91F575B(S)/C(S)	MB91F575BH(S)/CH(S)
Sound Generator	5 channels	
Software Watchdog	Yes	
Hardware Watchdog	Yes	
Clock supervisor	Initial value "ON"	Initial value "OFF"
CRC generation	Yes	
Low-voltage detection reset (External low-voltage detection)	Yes	
Low-voltage detection reset (Internal low-voltage detection)	Yes	
Package	LQFP-144	
Others	Flash Products	
On Chip Debug	Yes	

*1: I^2C only supported by ch.0 and ch.1.

Item / Product	MB91F577B(S)/C(S)	MB91F577BH(S)/CH(S)
System Clock	On chip PLL Clock multiple method	
Minimum instruction execution time	Around 12.5ns (80MHz)	
Sub clock	Yes(Non-S series) No(S series)	
FLASH Capacity (Program)	1024 + 64KB	
FLASH Capacity (Work)	64KB	
RAM	64KB + 8KB	
BI-ROM	4KB	
GDC	None	
External BUS I/F	Address : 22-bit Data :16-bit (Part of the External BUS I/F pins can select the power supply 5V or 3.3V)	
DMA Controller	16 channels	
Base Timer(16bit)	2 channels	
Free-run Timer(32bit)	6 channels	
Input capture(32bit)	12 channels	
Output Compare(32bit)	12 channels	
Reload Timer(16bit)	7 channels	
PPG timer(16bit)	24 channels	
Up/down Counter	2 channels	
Clock Supervisor	Yes	
D/A converter	2 channels	
External Interrupt	16 channels	
A/D converter (8bit/10bit)	40 channels	
LIN-UART	6 channels	
Multi-Function serial communication	4 channels[*1]	
HS-SPI	Yes Up to 16MHz Note: In this series, the HS-SPI function is prohibited.	
LCD Controller	32seg × 4com(Static drive 8seg × 1com)	
CAN	64msg × 1 channel / 32msg × 2 channels	
Stepping Motor Controller	6 channels	
Sound Generator	5 channels	

Item / Product	MB91F577B(S)/C(S)	MB91F577BH(S)/CH(S)
Software Watchdog	Yes	
Hardware Watchdog	Yes	
Clock supervisor	Initial value "ON"	Initial value "OFF"
CRC generation	Yes	
Low-voltage detection reset (External low-voltage detection)	Yes	
Low-voltage detection reset (Internal low-voltage detection)	Yes	
Package	LQFP-144	
Others	Flash Products	
On Chip Debug	Yes	

*1: I^2C only supported by ch.0 and ch.1.

Item / Product	MB91F 578C(S)(M)	MB91F 578CH(S)(M)	MB91F 579C(S)(M)	MB91F 579CH(S)(M)
System Clock	On chip PLL Clock multiple method			
Minimum instruction execution time	Around 12.5ns (80MHz)			
Sub clock	Yes(Non-S series) No(S series)			
FLASH Capacity (Program)	1536 + 64KB		2048 + 64KB	
FLASH Capacity (Work)	64KB			
RAM	96KB + 16KB		128KB + 16KB	
BI-ROM	4KB			
GDC	None			
External BUS I/F	Address : 22-bit Data :16-bit (Part of the External BUS I/F pins can select the power supply 5V or 3.3V)			
DMA Controller	16 channels			
Base Timer(16bit)	2 channels			
Free-run Timer(32bit)	6 channels			
Input capture(32bit)	12 channels			
Output Compare(32bit)	12 channels			
Reload Timer(16bit)	7 channels			
PPG timer(16bit)	24 channels			
Up/down Counter	2 channels			
Clock Supervisor	Yes			
D/A converter	2 channels			
External Interrupt	16 channels			
A/D converter (8bit/10bit)	40 channels			
LIN-UART	6 channels			
Multi-Function serial communication	4 channels[*1]			
HS-SPI	No			
LCD Controller	32seg × 4com(Static drive 8seg × 1com)			
CAN	64msg × 1 channel / 32msg × 2 channels			
Stepping Motor Controller	6 channels			
Sound Generator	5 channels			
Software Watchdog	Yes			

Item / Product	MB91F 578C(S)(M)	MB91F 578CH(S)(M)	MB91F 579C(S)(M)	MB91F 579CH(S)(M)
Hardware Watchdog	Yes			
Clock supervisor	Initial value "ON"	Initial value "OFF"	Initial value "ON"	Initial value "OFF"
CRC generation	Yes			
Low-voltage detection reset (External low-voltage detection)	Yes			
Low-voltage detection reset (Internal low-voltage detection)	Yes			
Package	LQFP-144 LQFP-208 (with suffix "M")			
Others	Flash Products			
On Chip Debug	Yes			

*1: I^2C only supported by ch.0 and ch.1.

2. Pin Assignment (LQFP-144)

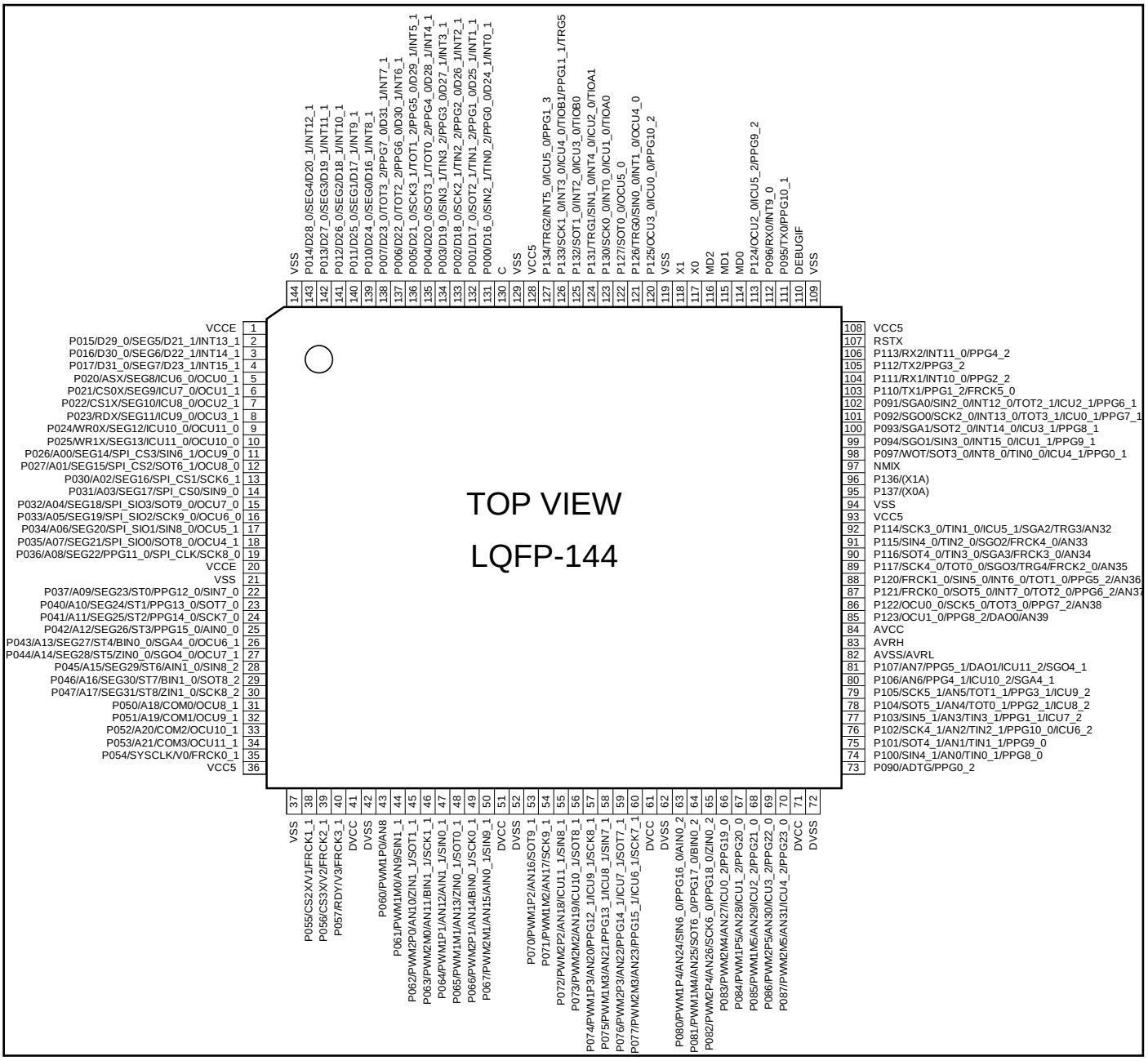

3. Pin Assignment (LQFP-208)

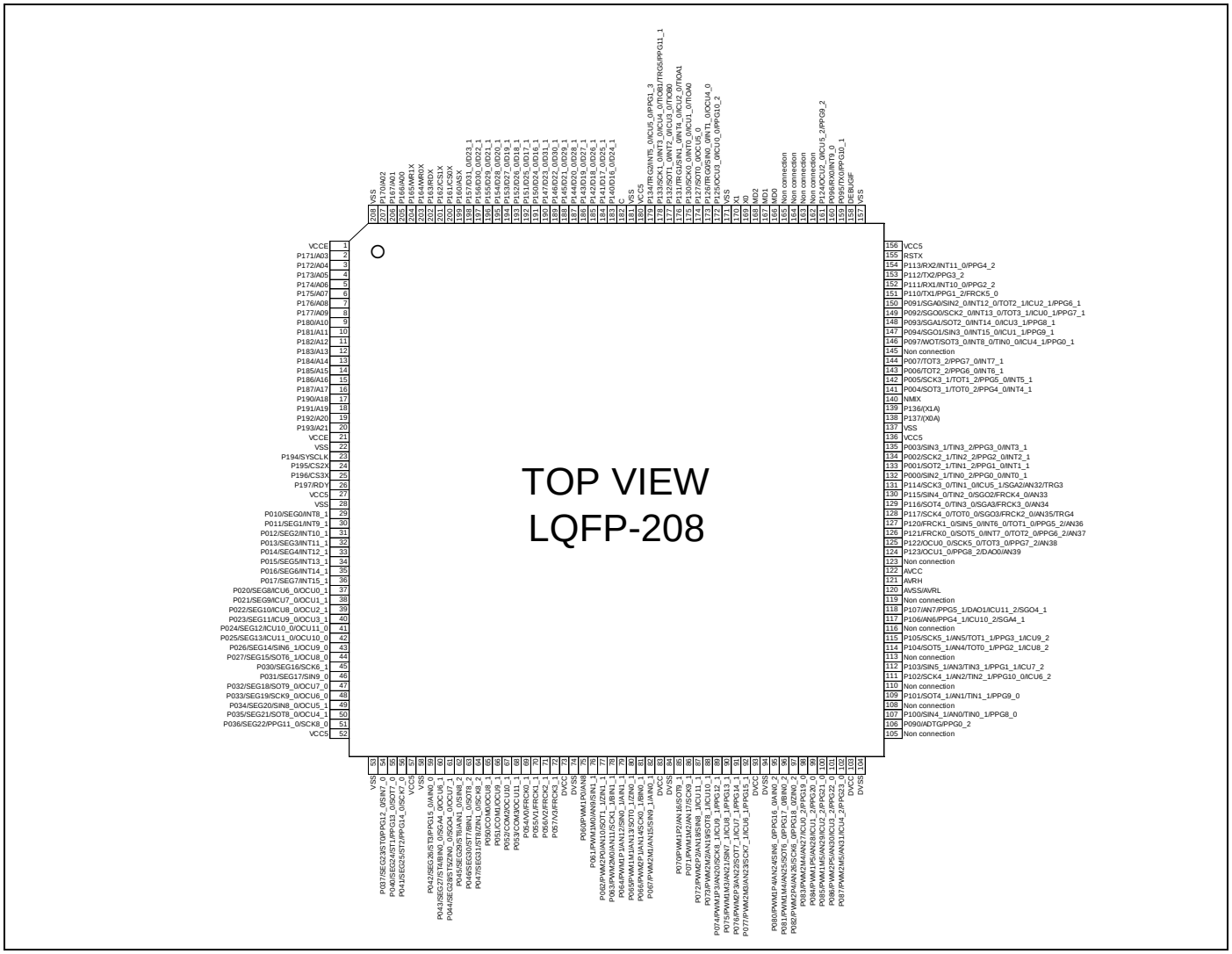

4. Pin Description (LQFP-144)

Pin Number	Pin Name	I/O Circuit Type	Function Description
2	P015	H/I4[*1]	General-Purpose I/O Port
	D29_0		External Bus Data I/O pin
	SEG5		LCDC Segment(Duty)Output pin
	D21_1		External Bus Data I/O pin
	INT13_1		External Interrupt Request Input pin ch.13 relocation 1
3	P016	H/I4[*1]	General-Purpose I/O Port
	D30_0		External Bus Data I/O pin
	SEG6		LCDC Segment(Duty)Output pin
	D22_1		External Bus Data I/O pin
	INT14_1		External Interrupt Request Input pin ch.14 relocation 1
4	P017	H/I4[*1]	General-Purpose I/O Port
	D31_0		External Bus Data I/O pin
	SEG7		LCDC Segment(Duty)Output pin
	D23_1		External Bus Data I/O pin
	INT15_1		External Interrupt Request Input pin ch.15 relocation 1
5	P020	H/I4[*1]	General-Purpose I/O Port
	ASX		External Bus Address-Strobe Output pin
	SEG8		LCDC Segment(Duty)Output pin
	ICU6_0		Input Capture Input pin ch.6 relocation 0
	OCU0_1		Output Compare Output pin ch.0 relocation 1
6	P021	H/I4[*1]	General-Purpose I/O Port
	CS0X		External Bus Chip-Select 0 Output pin
	SEG9		LCDC Segment(Duty)Output pin
	ICU7_0		Input Capture Input pin ch.7 relocation 0
	OCU1_1		Output Compare Output pin ch.1 relocation 1
7	P022	H/I4[*1]	General-Purpose I/O Port
	CS1X		External Bus Chip-Select 1 Output pin
	SEG10		LCDC Segment(Duty)Output pin
	ICU8_0		Input Capture Input pin ch.8 relocation 0
	OCU2_1		Output Compare Output pin ch.2 relocation 1
8	P023	H/I4[*1]	General-Purpose I/O Port
	RDX		External Bus Read-Strobe Output pin
	SEG11		LCDC Segment(Duty)Output pin
	ICU9_0		Input Capture Input pin ch.9 relocation 0
	OCU3_1		Output Compare Output pin ch.3 relocation 1
9	P024	H/I4[*1]	General-Purpose I/O Port
	WR0X		External Bus Write-Strobe 0 Output pin
	SEG12		LCDC Segment(Duty)Output pin
	ICU10_0		Input Capture Input pin ch.10 relocation 0
	OCU11_0		Output Compare Output pin ch.11 relocation 0

Pin Number	Pin Name	I/O Circuit Type	Function Description
10	P025	H/I4[*1]	General-Purpose I/O Port
	WR1X		External Bus Write-Strobe 1 Output pin
	SEG13		LCDC Segment(Duty)Output pin
	ICU11_0		Input Capture Input pin ch.11 relocation 0
	OCU10_0		Output Compare Output pin ch.10 relocation 0
11	P026	H/I4[*1]	General-Purpose I/O Port
	A00		External Bus Address Output pin
	SEG14		LCDC Segment(Duty)Output pin
	SPI_CS3		HS_SPI SSEL3 Output pin (Not supported)
	SIN6_1		LIN_UART Serial Input pin ch.6 relocation 1
	OCU9_0		Output Compare Output pin ch.9 relocation 0
12	P027	H/I4[*1]	General-Purpose I/O Port
	A01		External Bus Address Output pin
	SEG15		LCDC Segment(Duty)Output pin
	SPI_CS2		HS_SPI SSEL2 Output pin (Not supported)
	SOT6_1		LIN_UART Serial Output pin ch.6 relocation 1
	OCU8_0		Output Compare Output pin ch.8 relocation 0
13	P030	H/I4[*1]	General-Purpose I/O Port
	A02		External Bus Address Output pin
	SEG16		LCDC Segment(Duty)Output pin
	SPI_CS1		HS_SPI SSEL1 Output pin (Not supported)
	SCK6_1		LIN_UART Serial Clock I/O pin ch.6 relocation 1
14	P031	H/I4[*1]	General-Purpose I/O Port
	A03		External Bus Address Output pin
	SEG17		LCDC Segment(Duty)Output pin
	SPI_CS0		HS_SPI SSEL0 I/O pin (Not supported)
	SIN9_0		Multi-function Serial Input pin ch.9 relocation 0
15	P032	H/I4[*1]	General-Purpose I/O Port
	A04		External Bus Address Output pin
	SEG18		LCDC Segment(Duty)Output pin
	SPI_SIO3		HS_SPI SDATA3 I/O pin (Not supported)
	SOT9_0		Multi-function Serial Output pin ch.9 relocation 0
	OCU7_0		Output Compare Output pin ch.7 relocation 0
16	P033	H/I4[*1]	General-Purpose I/O Port
	A05		External Bus Address Output pin
	SEG19		LCDC Segment(Duty)Output pin
	SPI_SIO2		HS_SPI SDATA2 I/O pin (Not supported)
	SCK9_0		Multi-function Serial Clock I/O pin ch.9 relocation 0
	OCU6_0		Output Compare Output pin ch.6 relocation 0

Pin Number	Pin Name	I/O Circuit Type	Function Description
17	P034	H/I4[*1]	General-Purpose I/O Port
	A06		External Bus Address Output pin
	SEG20		LCDC Segment(Duty)Output pin
	SPI_SIO1		HS_SPI SDATA1 I/O pin (Not supported)
	SIN8_0		Multi-function Serial Input pin ch.8 relocation 0
	OCU5_1		Output Compare Output pin ch.5 relocation 1
18	P035	H/I4[*1]	General-Purpose I/O Port
	A07		External Bus Address Output pin
	SEG21		LCDC Segment(Duty)Output pin
	SPI_SIO0		HS_SPI SDATA0 I/O pin (Not supported)
	SOT8_0		Multi-function Serial Output pin ch.8 relocation 0
	OCU4_1		Output Compare Output pin ch.4 relocation 1
19	P036	H/I4[*1]	General-Purpose I/O Port
	A08		External Bus Address Output pin
	SEG22		LCDC Segment(Duty)Output pin
	PPG11_0		PPG Output pin ch.11 relocation 0
	SPI_CLK		HS_SPI SCLK I/O pin (Not supported)
	SCK8_0		Multi-function Serial Clock I/O pin ch.8 relocation 0
22	P037	I	General-Purpose I/O Port
	A09		External Bus Address Output pin
	SEG23		LCDC Segment(Duty)Output pin
	ST0		LCDC Segment(Static)Output pin
	PPG12_0		PPG Output pin ch.12 relocation 0
	SIN7_0		LIN_UART Serial Input pin ch.7 relocation 0
23	P040	I	General-Purpose I/O Port
	A10		External Bus Address Output pin
	SEG24		LCDC Segment(Duty)Output pin
	ST1		LCDC Segment(Static)Output pin
	PPG13_0		PPG Output pin ch.13 relocation 0
	SOT7_0		LIN_UART Serial Output pin ch.7 relocation 0
24	P041	I	General-Purpose I/O Port
	A11		External Bus Address Output pin
	SEG25		LCDC Segment(Duty)Output pin
	ST2		LCDC Segment(Static)Output pin
	PPG14_0		PPG Output pin ch.14 relocation 0
	SCK7_0		LIN_UART Serial Clock I/O pin ch.7 relocation 0
25	P042	I	General-Purpose I/O Port
	A12		External Bus Address Output pin
	SEG26		LCDC Segment(Duty)Output pin
	ST3		LCDC Segment(Static)Output pin
	PPG15_0		PPG Output pin ch.15 relocation 0
	AIN0_0		Up/down Counter AIN Input pin ch.0 relocation 0

Pin Number	Pin Name	I/O Circuit Type	Function Description
26	P043	I	General-Purpose I/O Port
	A13		External Bus Address Output pin
	SEG27		LCDC Segment(Duty)Output pin
	ST4		LCDC Segment(Static)Output pin
	BIN0_0		Up/down Counter BIN Input pin ch.0 relocation 0
	SGA4_0		Sound Generator SGA Output pin ch.4 relocation 0
	OCU6_1		Output Compare Output pin ch.6 relocation 1
27	P044	I	General-Purpose I/O Port
	A14		External Bus Address Output pin
	SEG28		LCDC Segment(Duty)Output pin
	ST5		LCDC Segment(Static)Output pin
	ZIN0_0		Up/down Counter ZIN Input pin ch.0 relocation 0
	SGO4_0		Sound Generator SGO Output pin ch.4 relocation 0
	OCU7_1		Output Compare Output pin ch.7 relocation 1
28	P045	I	General-Purpose I/O Port
	A15		External Bus Address Output pin
	SEG29		LCDC Segment(Duty)Output pin
	ST6		LCDC Segment(Static)Output pin
	AIN1_0		Up/down Counter AIN Input pin ch.1 relocation 0
	SIN8_2		Multi-function Serial Input pin ch.8 relocation 2
29	P046	I	General-Purpose I/O Port
	A16		External Bus Address Output pin
	SEG30		LCDC Segment(Duty)Output pin
	ST7		LCDC Segment(Static)Output pin
	BIN1_0		Up/down Counter BIN Input pin ch.1 relocation 0
	SOT8_2		Multi-function Serial Output pin ch.8 relocation 2
30	P047	I	General-Purpose I/O Port
	A17		External Bus Address Output pin
	SEG31		LCDC Segment(Duty)Output pin
	ST8		LCDC Segment(Static)Output pin
	ZIN1_0		Up/down Counter ZIN Input pin ch.1 relocation 0
	SCK8_2		Multi-function Serial Clock I/O pin ch.8 relocation 2
31	P050	I	General-Purpose I/O Port
	A18		External Bus Address Output pin
	COM0		LCDC Segment(Duty)Common Output pin
	OCU8_1		Output Compare Output pin ch.8 relocation 1
32	P051	I	General-Purpose I/O Port
	A19		External Bus Address Output pin
	COM1		LCDC Segment(Duty)Common Output pin
	OCU9_1		Output Compare Output pin ch.9 relocation 1

Pin Number	Pin Name	I/O Circuit Type	Function Description
33	P052	I	General-Purpose I/O Port
	A20		External Bus Address Output pin
	COM2		LCDC Segment(Duty)Common Output pin
	OCU10_1		Output Compare Output pin ch.10 relocation 1
34	P053	I	General-Purpose I/O Port
	A21		External Bus Address Output pin
	COM3		LCDC Segment(Duty)Common Output pin
	OCU11_1		Output Compare Output pin ch.11 relocation 1
35	P054	I2	General-Purpose I/O Port
	SYSCLK		External Bus Clock Output pin
	V0		LCDC Reference Voltage V0 Input pin
	FRCK0_1		Free-Run Timer Clock Input pin ch.0 relocation 1
38	P055	I2	General-Purpose I/O Port
	CS2X		External Bus Chip-Select 2 Output pin
	V1		LCDC Reference Voltage V1 Input pin
	FRCK1_1		Free-Run Timer Clock Input pin ch.1 relocation 1
39	P056	I2	General-Purpose I/O Port
	CS3X		External Bus Chip-Select 3 Output pin
	V2		LCDC Reference Voltage V2 Input pin
	FRCK2_1		Free-Run Timer Clock Input pin ch.2 relocation 1
40	P057	I3	General-Purpose I/O Port (Input only. No output.)
	RDY		External Bus RDY Input pin
	V3		LCDC Reference Voltage V3 Input pin
	FRCK3_1		Free-Run Timer Clock Input pin ch.3 relocation 1
43	P060	K	General-Purpose I/O Port
	PWM1P0		SMC Output pin ch.0
	AN8		ADC Analog Input pin ch.8
44	P061	K	General-Purpose I/O Port
	PWM1M0		SMC Output pin ch.0
	AN9		ADC Analog Input pin ch.9
	SIN1_1		Multi-function Serial Input pin ch.1 relocation 1
45	P062	K	General-Purpose I/O Port
	PWM2P0		SMC Output pin ch.0
	AN10		ADC Analog Input pin ch.10
	ZIN1_1		Up/down Counter ZIN Input pin ch.1 relocation 1
	SOT1_1		Multi-function Serial Output pin ch.1 relocation 1
46	P063	K	General-Purpose I/O Port
	PWM2M0		SMC Output pin ch.0
	AN11		ADC Analog Input pin ch.11
	BIN1_1		Up/down Counter BIN Input pin ch.1 relocation 1
	SCK1_1		Multi-function Serial Clock I/O pin ch.1 relocation 1

Pin Number	Pin Name	I/O Circuit Type	Function Description
47	P064	K	General-Purpose I/O Port
	PWM1P1		SMC Output pin ch.1
	AN12		ADC Analog Input pin ch.12
	AIN1_1		Up/down Counter AIN Input pin ch.1 relocation 1
	SIN0_1		Multi-function Serial Input pin ch.0 relocation 1
48	P065	K	General-Purpose I/O Port
	PWM1M1		SMC Output pin ch.1
	AN13		ADC Analog Input pin ch.13
	ZIN0_1		Up/down Counter ZIN Input pin ch.0 relocation 1
	SOT0_1		Multi-function Serial Output pin ch.0 relocation 1
49	P066	K	General-Purpose I/O Port
	PWM2P1		SMC Output pin ch.1
	AN14		ADC Analog Input pin ch.14
	BIN0_1		Up/down Counter BIN Input pin ch.0 relocation 1
	SCK0_1		Multi-function Serial Clock I/O pin ch.0 relocation 1
50	P067	K	General-Purpose I/O Port
	PWM2M1		SMC Output pin ch.1
	AN15		ADC Analog Input pin ch.15
	AIN0_1		Up/down Counter AIN Input pin ch.0 relocation 1
	SIN9_1		Multi-function Serial Input pin ch.9 relocation 1
53	P070	K	General-Purpose I/O Port
	PWM1P2		SMC Output pin ch.2
	AN16		ADC Analog Input pin ch.16
	SOT9_1		Multi-function Serial Output pin ch.9 relocation 1
54	P071	K	General-Purpose I/O Port
	PWM1M2		SMC Output pin ch.2
	AN17		ADC Analog Input pin ch.17
	SCK9_1		Multi-function Serial Clock I/O pin ch.9 relocation 1
55	P072	K	General-Purpose I/O Port
	PWM2P2		SMC Output pin ch.2
	AN18		ADC Analog Input pin ch.18
	ICU11_1		Input Capture Input pin ch.11 relocation 1
	SIN8_1		Multi-function Serial Input pin ch.8 relocation 1
56	P073	K	General-Purpose I/O Port
	PWM2M2		SMC Output pin ch.2
	AN19		ADC Analog Input pin ch.19
	ICU10_1		Input Capture Input pin ch.10 relocation 1
	SOT8_1		Multi-function Serial Output pin ch.8 relocation 1

Pin Number	Pin Name	I/O Circuit Type	Function Description
57	P074	K	General-Purpose I/O Port
	PWM1P3		SMC Output pin ch.3
	AN20		ADC Analog Input pin ch.20
	PPG12_1		PPG Output pin ch.12 relocation 1
	ICU9_1		Input Capture Input pin ch.9 relocation 1
	SCK8_1		Multi-function Serial Clock I/O pin ch.8 relocation 1
58	P075	K	General-Purpose I/O Port
	PWM1M3		SMC Output pin ch.3
	AN21		ADC Analog Input pin ch.21
	PPG13_1		PPG Output pin ch.13 relocation 1
	ICU8_1		Input Capture Input pin ch.8 relocation 1
	SIN7_1		LIN_UART Serial Input pin ch.7 relocation 1
59	P076	K	General-Purpose I/O Port
	PWM2P3		SMC Output pin ch.3
	AN22		ADC Analog Input pin ch.22
	PPG14_1		PPG Output pin ch.14 relocation 1
	ICU7_1		Input Capture Input pin ch.7 relocation 1
	SOT7_1		LIN_UART Serial Output pin ch.7 relocation 1
60	P077	K	General-Purpose I/O Port
	PWM2M3		SMC Output pin ch.3
	AN23		ADC Analog Input pin ch.23
	PPG15_1		PPG Output pin ch.15 relocation 1
	ICU6_1		Input Capture Input pin ch.6 relocation 1
	SCK7_1		LIN_UART Serial Clock I/O pin ch.7 relocation 1
63	P080	K	General-Purpose I/O Port
	PWM1P4		SMC Output pin ch.4
	AN24		ADC Analog Input pin ch.24
	SIN6_0		LIN_UART Serial Input pin ch.6 relocation 0
	PPG16_0		PPG Output pin ch.16 relocation 0
	AIN0_2		Up/down Counter AIN Input pin ch.0 relocation 2
64	P081	K	General-Purpose I/O Port
	PWM1M4		SMC Output pin ch.4
	AN25		ADC Analog Input pin ch.25
	SOT6_0		LIN_UART Serial Output pin ch.6 relocation 0
	PPG17_0		PPG Output pin ch.17 relocation 0
	BIN0_2		Up/down Counter BIN Input pin ch.0 relocation 2
65	P082	K	General-Purpose I/O Port
	PWM2P4		SMC Output pin ch.4
	AN26		ADC Analog Input pin ch.26
	SCK6_0		LIN_UART Serial Clock I/O pin ch.6 relocation 0
	PPG18_0		PPG Output pin ch.18 relocation 0
	ZIN0_2		Up/down Counter ZIN Input pin ch.0 relocation 2

Pin Number	Pin Name	I/O Circuit Type	Function Description
66	P083	K	General-Purpose I/O Port
	PWM2M4		SMC Output pin ch.4
	AN27		ADC Analog Input pin ch.27
	ICU0_2		Input Capture Input pin ch.0 relocation 2
	PPG19_0		PPG Output pin ch.19 relocation 0
67	P084	K	General-Purpose I/O Port
	PWM1P5		SMC Output pin ch.5
	AN28		ADC Analog Input pin ch.28
	ICU1_2		Input Capture Input pin ch.1 relocation 2
	PPG20_0		PPG Output pin ch.20 relocation 0
68	P085	K	General-Purpose I/O Port
	PWM1M5		SMC Output pin ch.5
	AN29		ADC Analog Input pin ch.29
	ICU2_2		Input Capture Input pin ch.2 relocation 2
	PPG21_0		PPG Output pin ch.21 relocation 0
69	P086	K	General-Purpose I/O Port
	PWM2P5		SMC Output pin ch.5
	AN30		ADC Analog Input pin ch.30
	ICU3_2		Input Capture Input pin ch.3 relocation 2
	PPG22_0		PPG Output pin ch.22 relocation 0
70	P087	K	General-Purpose I/O Port
	PWM2M5		SMC Output pin ch.5
	AN31		ADC Analog Input pin ch.31
	ICU4_2		Input Capture Input pin ch.4 relocation 2
	PPG23_0		PPG Output pin ch.23 relocation 0
73	P090	M	General-Purpose I/O Port
	ADTG		ADC External Trigger Input pin
	PPG0_2		PPG Output pin ch.0 relocation 2
74	P100	J	General-Purpose I/O Port
	SIN4_1		LIN_UART Serial Input pin ch.4 relocation 1
	AN0		ADC Analog Input pin ch.0
	TIN0_1		Reload Timer Event Input pin ch.0 relocation 1
	PPG8_0		PPG Output pin ch.8 relocation 0
75	P101	J	General-Purpose I/O Port
	SOT4_1		LIN_UART Serial Output pin ch.4 relocation 1
	AN1		ADC Analog Input pin ch.1
	TIN1_1		Reload Timer Event Input pin ch.1 relocation 1
	PPG9_0		PPG Output pin ch.9 relocation 0

Pin Number	Pin Name	I/O Circuit Type	Function Description
76	P102	J	General-Purpose I/O Port
	SCK4_1		LIN_UART Serial Clock I/O pin ch.4 relocation 1
	AN2		ADC Analog Input pin ch.2
	TIN2_1		Reload Timer Event Input pin ch.2 relocation 1
	PPG10_0		PPG Output pin ch.10 relocation 0
	ICU6_2		Input Capture Input pin ch.6 relocation 2
77	P103	J	General-Purpose I/O Port
	SIN5_1		LIN_UART Serial Input pin ch.5 relocation 1
	AN3		ADC Analog Input pin ch.3
	TIN3_1		Reload Timer Event Input pin ch.3 relocation 1
	PPG1_1		PPG Output pin ch.1 relocation 1
	ICU7_2		Input Capture Input pin ch.7 relocation 2
78	P104	J	General-Purpose I/O Port
	SOT5_1		LIN_UART Serial Output pin ch.5 relocation 1
	AN4		ADC Analog Input pin ch.4
	TOT0_1		Reload Timer Output pin ch.0 relocation 1
	PPG2_1		PPG Output pin ch.2 relocation 1
	ICU8_2		Input Capture Input pin ch.8 relocation 2
79	P105	J	General-Purpose I/O Port
	SCK5_1		LIN_UART Serial Clock I/O pin ch.5 relocation 1
	AN5		ADC Analog Input pin ch.5
	TOT1_1		Reload Timer Output pin ch.1 relocation 1
	PPG3_1		PPG Output pin ch.3 relocation 1
	ICU9_2		Input Capture Input pin ch.9 relocation 2
80	P106	J	General-Purpose I/O Port
	AN6		ADC Analog Input pin ch.6
	PPG4_1		PPG Output pin ch.4 relocation 1
	ICU10_2		Input Capture Input pin ch.10 relocation 2
	SGA4_1		Sound Generator SGA Output pin ch.4 relocation 1
81	P107	L	General-Purpose I/O Port
	AN7		ADC Analog Input pin ch.7
	PPG5_1		PPG Output pin ch.5 relocation 1
	DAO1		DAC Output pin ch.1
	ICU11_2		Input Capture Input pin ch.11 relocation 2
	SGO4_1		Sound Generator SGO Output pin ch.4 relocation 1
85	P123	L	General-Purpose I/O Port
	OCU1_0		Output Compare Output pin ch.1 relocation 0
	PPG8_2		PPG Output pin ch.8 relocation 2
	DAO0		DAC Output pin ch.0
	AN39		ADC Analog Input pin ch.39

Pin Number	Pin Name	I/O Circuit Type	Function Description
86	P122	J	General-Purpose I/O Port
	OCU0_0		Output Compare Output pin ch.0 relocation 0
	SCK5_0		LIN_UART Serial Clock I/O pin ch.5 relocation 0
	TOT3_0		Reload Timer Output pin ch.3 relocation 0
	PPG7_2		PPG Output pin ch.7 relocation 2
	AN38		ADC Analog Input pin ch.38
87	P121	J	General-Purpose I/O Port
	FRCK0_0		Free-Run Timer Clock Input pin ch.0 relocation 0
	SOT5_0		LIN_UART Serial Output pin ch.5 relocation 0
	INT7_0		External Interrupt Request Input pin ch.7 relocation 0
	TOT2_0		Reload Timer Output pin ch.2 relocation 0
	PPG6_2		PPG Output pin ch.6 relocation 2
	AN37		ADC Analog Input pin ch.37
88	P120	J	General-Purpose I/O Port
	FRCK1_0		Free-Run Timer Clock Input pin ch.1 relocation 0
	SIN5_0		LIN_UART Serial Input pin ch.5 relocation 0
	INT6_0		External Interrupt Request Input pin ch.6 relocation 0
	TOT1_0		Reload Timer Output pin ch.1 relocation 0
	PPG5_2		PPG Output pin ch.5 relocation 2
	AN36		ADC Analog Input pin ch.36
89	P117	J	General-Purpose I/O Port
	SCK4_0		LIN_UART Serial Clock I/O pin ch.4 relocation 0
	TOT0_0		Reload Timer Output pin ch.0 relocation 0
	SGO3		Sound Generator SGO Output pin ch.3
	TRG4		PPG Trigger Input pin 4 (ch.16-ch.19)
	FRCK2_0		Free-Run Timer Clock Input pin ch.2 relocation 0
	AN35		ADC Analog Input pin ch.35
90	P116	J	General-Purpose I/O Port
	SOT4_0		LIN_UART Serial Output pin ch.4 relocation 0
	TIN3_0		Reload Timer Event Input pin ch.3 relocation 0
	SGA3		Sound Generator SGA Output pin ch.3
	FRCK3_0		Free-Run Timer Clock Input pin ch.3 relocation 0
	AN34		ADC Analog Input pin ch.34
91	P115	J	General-Purpose I/O Port
	SIN4_0		LIN_UART Serial Input pin ch.4 relocation 0
	TIN2_0		Reload Timer Event Input pin ch.2 relocation 0
	SGO2		Sound Generator SGO Output pin ch.2
	FRCK4_0		Free-Run Timer Clock Input pin ch.4 relocation 0
	AN33		ADC Analog Input pin ch.33

Pin Number	Pin Name	I/O Circuit Type	Function Description
92	P114	J	General-Purpose I/O Port
	SCK3_0		LIN_UART Serial Clock I/O pin ch.3 relocation 0
	TIN1_0		Reload Timer Event Input pin ch.1 relocation 0
	ICU5_1		Input Capture Input pin ch.5 relocation 1
	SGA2		Sound Generator SGA Output pin ch.2
	TRG3		PPG Trigger Input pin 3 (ch.12-ch.15)
	AN32		ADC Analog Input pin ch.32
95	P137	M (Y)	General-Purpose I/O Port
	(X0A)		Sub Clock oscillation Input pin (only dual clock product)
96	P136	M (Y)	General-Purpose I/O Port
	(X1A)		Sub Clock oscillation Output pin (only dual clock product)
97	NMIX	R	NMI Pin
98	P097	M	General-Purpose I/O Port
	WOT		RTC Overflow Output pin
	SOT3_0		LIN_UART Serial Output pin ch.3 relocation 0
	INT8_0		External Interrupt Request Input pin ch.8 relocation 0
	TIN0_0		Reload Timer Event Input pin ch.0 relocation 0
	ICU4_1		Input Capture Input pin ch.4 relocation 1
	PPG0_1		PPG Output pin ch.0 relocation 1
99	P094	M	General-Purpose I/O Port
	SGO1		Sound Generator SGO Output pin ch.1
	SIN3_0		LIN_UART Serial Input pin ch.3 relocation 0
	INT15_0		External Interrupt Request Input pin ch.15 relocation 0
	ICU1_1		Input Capture Input pin ch.1 relocation 1
	PPG9_1		PPG Output pin ch.9 relocation 1
100	P093	M	General-Purpose I/O Port
	SGA1		Sound Generator SGA Output pin ch.1
	SOT2_0		LIN_UART Serial Output pin ch.2 relocation 0
	INT14_0		External Interrupt Request Input pin ch.14 relocation 0
	ICU3_1		Input Capture Input pin ch.3 relocation 1
	PPG8_1		PPG Output pin ch.8 relocation 1
101	P092	M	General-Purpose I/O Port
	SGO0		Sound Generator SGO Output pin ch.0
	SCK2_0		LIN_UART Serial Clock I/O pin ch.2 relocation 0
	INT13_0		External Interrupt Request Input pin ch.13 relocation 0
	TOT3_1		Reload Timer Output pin ch.3 relocation 1
	ICU0_1		Input Capture Input pin ch.0 relocation 1
	PPG7_1		PPG Output pin ch.7 relocation 1

Pin Number	Pin Name	I/O Circuit Type	Function Description
102	P091	M	General-Purpose I/O Port
	SGA0		Sound Generator SGA Output pin ch.0
	SIN2_0		LIN_UART Serial Input pin ch.2 relocation 0
	INT12_0		External Interrupt Request Input pin ch.12 relocation 0
	TOT2_1		Reload Timer Output pin ch.2 relocation 1
	ICU2_1		Input Capture Input pin ch.2 relocation 1
	PPG6_1		PPG Output pin ch.6 relocation 1
103	P110	M	General-Purpose I/O Port
	TX1		CAN TX Data Output pin ch.1
	PPG1_2		PPG Output pin ch.1 relocation 2
	FRCK5_0		Free-Run Timer Clock Input pin ch.5 relocation 0
104	P111	M	General-Purpose I/O Port
	RX1		CAN RX Data Input pin ch.1
	INT10_0		External Interrupt Request Input pin ch.10 relocation 0
	PPG2_2		PPG Output pin ch.2 relocation 2
105	P112	M	General-Purpose I/O Port
	TX2		CAN TX Data Output pin ch.2
	PPG3_2		PPG Output pin ch.3 relocation 2
106	P113	M	General-Purpose I/O Port
	RX2		CAN RX Data Input pin ch.2
	INT11_0		External Interrupt Request Input pin ch.11 relocation 0
	PPG4_2		PPG Output pin ch.4 relocation 2
107	RSTX	R	Reset Pin
110	DEBUGIF	B	DEBUG I/F pin
111	P095	M	General-Purpose I/O Port
	TX0		CAN TX Data Output pin ch.0
	PPG10_1		PPG Output pin ch.10 relocation 1
112	P096	M	General-Purpose I/O Port
	RX0		CAN RX Data Input pin ch.0
	INT9_0		External Interrupt Request Input pin ch.9 relocation 0
113	P124	M	General-Purpose I/O Port
	OCU2_0		Output Compare Output pin ch.2 relocation 0
	ICU5_2		Input Capture Input pin ch.5 relocation 2
	PPG9_2		PPG Output pin ch.9 relocation 2
114	MD0	A	Mode Pin 0
115	MD1	A	Mode Pin 1
116	MD2	R2	Mode Pin 2
117	X0	X	Main Clock oscillation Input pin
118	X1	X	Main Clock oscillation Output pin
120	P125	M	General-Purpose I/O Port
	OCU3_0		Output Compare Output pin ch.3 relocation 0
	ICU0_0		Input Capture Input pin ch.0 relocation 0
	PPG10_2		PPG Output pin ch.10 relocation 2

Pin Number	Pin Name	I/O Circuit Type	Function Description
121	P126	M	General-Purpose I/O Port
	TRG0		PPG Trigger Input pin 0 (ch.0-ch.3)
	SIN0_0		Multi-function Serial Input pin ch.0 relocation 0
	INT1_0		External Interrupt Request Input pin ch.1 relocation 0
	OCU4_0		Output Compare Output pin ch.4 relocation 0
122	P127	N	General-Purpose I/O Port
	SOT0_0		Multi-function Serial Output pin ch.0 relocation 0
	OCU5_0		Output Compare Output pin ch.5 relocation 0
123	P130	N	General-Purpose I/O Port
	SCK0_0		Multi-function Serial Clock I/O pin ch.0 relocation 0
	INT0_0		External Interrupt Request Input pin ch.0 relocation 0
	ICU1_0		Input Capture Input pin ch.1 relocation 0
	TIOA0		Base Timer Output pin ch.0
124	P131	M	General-Purpose I/O Port
	TRG1		PPG Trigger Input pin 1 (ch.4-ch.7)
	SIN1_0		Multi-function Serial Input pin ch.1 relocation 0
	INT4_0		External Interrupt Request Input pin ch.4 relocation 0
	ICU2_0		Input Capture Input pin ch.2 relocation 0
	TIOA1		Base Timer I/O pin ch.1
125	P132	N	General-Purpose I/O Port
	SOT1_0		Multi-function Serial Output pin ch.1 relocation 0
	INT2_0		External Interrupt Request Input pin ch.2 relocation 0
	ICU3_0		Input Capture Input pin ch.3 relocation 0
	TIOB0		Base Timer Input pin ch.0
126	P133	N	General-Purpose I/O Port
	SCK1_0		Multi-function Serial Clock I/O pin ch.1 relocation 0
	INT3_0		External Interrupt Request Input pin ch.3 relocation 0
	ICU4_0		Input Capture Input pin ch.4 relocation 0
	TIOB1		Base Timer Input pin ch.1
	PPG11_1		PPG Output pin ch.11 relocation 1
	TRG5		PPG Trigger Input pin 5 (ch.20-ch.23)
127	P134	M	General-Purpose I/O Port
	TRG2		PPG Trigger Input pin 2 (ch.8-ch.11)
	INT5_0		External Interrupt Request Input pin ch.5 relocation 0
	ICU5_0		Input Capture Input pin ch.5 relocation 0
	PPG1_3		PPG Output pin ch.1 relocation 3
131	P000	M	General-Purpose I/O Port
	D16_0		External Bus Data I/O pin
	SIN2_1		LIN_UART Serial Input pin ch.2 relocation 1
	TIN0_2		Reload Timer Event Input pin ch.0 relocation 2
	PPG0_0		PPG Output pin ch.0 relocation 0
	D24_1		External Bus Data I/O pin
	INT0_1		External Interrupt Request Input pin ch.0 relocation 1

Pin Number	Pin Name	I/O Circuit Type	Function Description
132	P001	M	General-Purpose I/O Port
	D17_0		External Bus Data I/O pin
	SOT2_1		LIN_UART Serial Output pin ch.2 relocation 1
	TIN1_2		Reload Timer Event Input pin ch.1 relocation 2
	PPG1_0		PPG Output pin ch.1 relocation 0
	D25_1		External Bus Data I/O pin
	INT1_1		External Interrupt Request Input pin ch.1 relocation 1
133	P002	M	General-Purpose I/O Port
	D18_0		External Bus Data I/O pin
	SCK2_1		LIN_UART Serial Clock I/O pin ch.2 relocation 1
	TIN2_2		Reload Timer Event Input pin ch.2 relocation 2
	PPG2_0		PPG Output pin ch.2 relocation 0
	D26_1		External Bus Data I/O pin
	INT2_1		External Interrupt Request Input pin ch.2 relocation 1
134	P003	M	General-Purpose I/O Port
	D19_0		External Bus Data I/O pin
	SIN3_1		LIN_UART Serial Input pin ch.3 relocation 1
	TIN3_2		Reload Timer Event Input pin ch.3 relocation 2
	PPG3_0		PPG Output pin ch.3 relocation 0
	D27_1		External Bus Data I/O pin
	INT3_1		External Interrupt Request Input pin ch.3 relocation 1
135	P004	M	General-Purpose I/O Port
	D20_0		External Bus Data I/O pin
	SOT3_1		LIN_UART Serial Output pin ch.3 relocation 1
	TOT0_2		Reload Timer Output pin ch.0 relocation 2
	PPG4_0		PPG Output pin ch.4 relocation 0
	D28_1		External Bus Data I/O pin
	INT4_1		External Interrupt Request Input pin ch.4 relocation 1
136	P005	M	General-Purpose I/O Port
	D21_0		External Bus Data I/O pin
	SCK3_1		LIN_UART Serial Clock I/O pin ch.3 relocation 1
	TOT1_2		Reload Timer Output pin ch.1 relocation 2
	PPG5_0		PPG Output pin ch.5 relocation 0
	D29_1		External Bus Data I/O pin
	INT5_1		External Interrupt Request Input pin ch.5 relocation 1
137	P006	M	General-Purpose I/O Port
	D22_0		External Bus Data I/O pin
	TOT2_2		Reload Timer Output pin ch.2 relocation 2
	PPG6_0		PPG Output pin ch.6 relocation 0
	D30_1		External Bus Data I/O pin
	INT6_1		External Interrupt Request Input pin ch.6 relocation 1

Pin Number	Pin Name	I/O Circuit Type	Function Description
138	P007	M	General-Purpose I/O Port
	D23_0		External Bus Data I/O pin
	TOT3_2		Reload Timer Output pin ch.3 relocation 2
	PPG7_0		PPG Output pin ch.7 relocation 0
	D31_1		External Bus Data I/O pin
	INT7_1		External Interrupt Request Input pin ch.7 relocation 1
139	P010	H/I4[*1]	General-Purpose I/O Port
	D24_0		External Bus Data I/O pin
	SEG0		LCDC Segment(Duty)Output pin
	D16_1		External Bus Data I/O pin
	INT8_1		External Interrupt Request Input pin ch.8 relocation 1
140	P011	H/I4[*1]	General-Purpose I/O Port
	D25_0		External Bus Data I/O pin
	SEG1		LCDC Segment(Duty)Output pin
	D17_1		External Bus Data I/O pin
	INT9_1		External Interrupt Request Input pin ch.9 relocation 1
141	P012	H/I4[*1]	General-Purpose I/O Port
	D26_0		External Bus Data I/O pin
	SEG2		LCDC Segment(Duty)Output pin
	D18_1		External Bus Data I/O pin
	INT10_1		External Interrupt Request Input pin ch.10 relocation 1
142	P013	H/I4[*1]	General-Purpose I/O Port
	D27_0		External Bus Data I/O pin
	SEG3		LCDC Segment(Duty)Output pin
	D19_1		External Bus Data I/O pin
	INT11_1		External Interrupt Request Input pin ch.11 relocation 1
143	P014	H/I4[*1]	General-Purpose I/O Port
	D28_0		External Bus Data I/O pin
	SEG4		LCDC Segment(Duty)Output pin
	D20_1		External Bus Data I/O pin
	INT12_1		External Interrupt Request Input pin ch.12 relocation 1
1	VCCE	-	+3.3v/+5.0v Power Supply pin
20	VCCE	-	+3.3v/+5.0v Power Supply pin
21	VSS	-	GND pin
36	VCC5	-	+5.0v Power Supply pin
37	VSS	-	GND pin
41	DVCC	-	Power Supply pin for SMC high current
42	DVSS	-	GND pin for SMC high current
51	DVCC	-	Power Supply pin for SMC high current
52	DVSS	-	GND pin for SMC high current
61	DVCC	-	Power Supply pin for SMC high current
62	DVSS	-	GND pin for SMC high current
71	DVCC	-	Power Supply pin for SMC high current

Pin Number	Pin Name	I/O Circuit Type	Function Description
72	DVSS	-	GND pin for SMC high current
82	AVSS/AVRL	-	ADC, DAC GND pin / Low Reference Voltage pin
83	AVRH	-	ADC High Reference Voltage pin
84	AVCC	-	ADC,DAC Analog Power Supply pin
93	VCC5	-	+5.0v Power Supply pin
94	VSS	-	GND pin
108	VCC5	-	+5.0v Power Supply pin
109	VSS	-	GND pin
119	VSS	-	GND pin
128	VCC5	-	+5.0v Power Supply pin
129	VSS	-	GND pin
130	C	-	External Capacitance Connection Pin
144	VSS	-	GND pin

*1: I/O circuit type H is applied to MB91F575/7 and type I4 applied to MB91F578/9.

5. Pin Description (LQFP-208)

Pin Number	Pin Name	I/O Circuit Type	Function Description
1	VCCE	-	+3.3v/+5.0v Power Supply pin
2	P171	M2	General-Purpose I/O Port
	A03		External Bus Address Output pin
3	P172	M2	General-Purpose I/O Port
	A04		External Bus Address Output pin
4	P173	M2	General-Purpose I/O Port
	A05		External Bus Address Output pin
5	P174	M2	General-Purpose I/O Port
	A06		External Bus Address Output pin
6	P175	M2	General-Purpose I/O Port
	A07		External Bus Address Output pin
7	P176	M2	General-Purpose I/O Port
	A08		External Bus Address Output pin
8	P177	M2	General-Purpose I/O Port
	A09		External Bus Address Output pin
9	P180	M2	General-Purpose I/O Port
	A10		External Bus Address Output pin
10	P181	M2	General-Purpose I/O Port
	A11		External Bus Address Output pin
11	P182	M2	General-Purpose I/O Port
	A12		External Bus Address Output pin
12	P183	M2	General-Purpose I/O Port
	A13		External Bus Address Output pin
13	P184	M2	General-Purpose I/O Port
	A14		External Bus Address Output pin
14	P185	M2	General-Purpose I/O Port
	A15		External Bus Address Output pin
15	P186	M2	General-Purpose I/O Port
	A16		External Bus Address Output pin
16	P187	M2	General-Purpose I/O Port
	A17		External Bus Address Output pin
17	P190	M2	General-Purpose I/O Port
	A18		External Bus Address Output pin
18	P191	M2	General-Purpose I/O Port
	A19		External Bus Address Output pin
19	P192	M2	General-Purpose I/O Port
	A20		External Bus Address Output pin
20	P193	M2	General-Purpose I/O Port
	A21		External Bus Address Output pin
21	VCCE	-	+3.3v/+5.0v Power Supply pin
22	VSS	-	GND pin
23	P194	M2	General-Purpose I/O Port
	SYSCLK		External Bus Clock Output pin
24	P195	M2	General-Purpose I/O Port
	CS2X		External Bus Chip-Select 2 Output pin
25	P196	M2	General-Purpose I/O Port
	CS3X		External Bus Chip-Select 3 Output pin
26	P197	M2	General-Purpose I/O Port
	RDY		External Bus RDY Input pin

Pin Number	Pin Name	I/O Circuit Type	Function Description
27	VCC5	-	+5.0v Power Supply pin
28	VSS	-	GND pin
29	P010	H	General-Purpose I/O Port
	SEG0		LCDC Segment(Duty)Output pin
29	INT8_1	H	External Interrupt Request Input pin ch.8 relocation 1
30	P011	I	General-Purpose I/O Port
	SEG1		LCDC Segment(Duty)Output pin
	INT9_1		External Interrupt Request Input pin ch.9 relocation 1
31	P012	I	General-Purpose I/O Port
	SEG2		LCDC Segment(Duty)Output pin
	INT10_1		External Interrupt Request Input pin ch.10 relocation 1
32	P013	I	General-Purpose I/O Port
	SEG3		LCDC Segment(Duty)Output pin
	INT11_1		External Interrupt Request Input pin ch.11 relocation 1
33	P014	I	General-Purpose I/O Port
	SEG4		LCDC Segment(Duty)Output pin
	INT12_1		External Interrupt Request Input pin ch.12 relocation 1
34	P015	I	General-Purpose I/O Port
	SEG5		LCDC Segment(Duty)Output pin
	INT13_1		External Interrupt Request Input pin ch.13 relocation 1
35	P016	I	General-Purpose I/O Port
	SEG6		LCDC Segment(Duty)Output pin
	INT14_1		External Interrupt Request Input pin ch.14 relocation 1
36	P017	I	General-Purpose I/O Port
	SEG7		LCDC Segment(Duty)Output pin
	INT15_1		External Interrupt Request Input pin ch.15 relocation 1
37	P020	I	General-Purpose I/O Port
	SEG8		LCDC Segment(Duty)Output pin
	ICU6_0		Input Capture Input pin ch.6 relocation 0
	OCU0_1		Output Compare Output pin ch.0 relocation 1
38	P021	I	General-Purpose I/O Port
	SEG9		LCDC Segment(Duty)Output pin
	ICU7_0		Input Capture Input pin ch.7 relocation 0
	OCU1_1		Output Compare Output pin ch.1 relocation 1
39	P022	I	General-Purpose I/O Port
	SEG10		LCDC Segment(Duty)Output pin
	ICU8_0		Input Capture Input pin ch.8 relocation 0
	OCU2_1		Output Compare Output pin ch.2 relocation 1
40	P023	I	General-Purpose I/O Port
	SEG11		LCDC Segment(Duty)Output pin
	ICU9_0		Input Capture Input pin ch.9 relocation 0
	OCU3_1		Output Compare Output pin ch.3 relocation 1
41	P024	I	General-Purpose I/O Port
	SEG12		LCDC Segment(Duty)Output pin
	ICU10_0		Input Capture Input pin ch.10 relocation 0
	OCU11_0		Output Compare Output pin ch.11 relocation 0
42	P025	I	General-Purpose I/O Port
	SEG13		LCDC Segment(Duty)Output pin
	ICU11_0		Input Capture Input pin ch.11 relocation 0
	OCU10_0		Output Compare Output pin ch.10 relocation 0

Pin Number	Pin Name	I/O Circuit Type	Function Description
43	P026	I	General-Purpose I/O Port
	SEG14		LCDC Segment(Duty)Output pin
	SIN6_1		LIN_UART Serial Input pin ch.6 relocation 1
	OCU9_0		Output Compare Output pin ch.9 relocation 0
44	P027	I	General-Purpose I/O Port
	SEG15		LCDC Segment(Duty)Output pin
	SOT6_1		LIN_UART Serial Output pin ch.6 relocation 1
	OCU8_0	I	Output Compare Output pin ch.8 relocation 8
45	P030	I	General-Purpose I/O Port
45	SEG16	I	LCDC Segment(Duty)Output pin
	SCK6_1		LIN_UART Serial Clock I/O pin ch.6 relocation 1
46	P031	I	General-Purpose I/O Port
	SEG17		LCDC Segment(Duty)Output pin
	SIN9_0		Multi-function Serial Input pin ch.9 relocation 0
47	P032	I	General-Purpose I/O Port
	SEG18		LCDC Segment(Duty)Output pin
	SOT9_0		Multi-function Serial Output pin ch.9 relocation 0
	OCU7_0		Output Compare Output pin ch.7 relocation 7
48	P033	I	General-Purpose I/O Port
	SEG19		LCDC Segment(Duty)Output pin
	SCK9_0		Multi-function Serial Clock I/O pin ch.9 relocation 0
	OCU6_0		Output Compare Output pin ch.6 relocation 6
49	P034	I	General-Purpose I/O Port
	SEG20		LCDC Segment(Duty)Output pin
	SIN8_0		Multi-function Serial Input pin ch.8 relocation 0
	OCU5_1		Output Compare Output pin ch.5 relocation 1
50	P035	I	General-Purpose I/O Port
	SEG21		LCDC Segment(Duty)Output pin
	SOT8_0		Multi-function Serial Output pin ch.8 relocation 0
	OCU4_1		Output Compare Output pin ch.4 relocation 1
51	P036	I	General-Purpose I/O Port
	SEG22		LCDC Segment(Duty)Output pin
	PPG11_0		PPG Output pin ch.11 relocation 0
	SCK8_0		Multi-function Serial Clock I/O pin ch.8 relocation 0
52	VCC5	-	+5.0v Power Supply pin
53	VSS	-	GND pin
54	P037	I	General-Purpose I/O Port
	SEG23		LCDC Segment(Duty)Output pin
	ST0		LCDC Segment(Static)Output pin
	PPG12_0		PPG Output pin ch.12 relocation 0
	SIN7_0		LIN_UART Serial Input pin ch.7 relocation 0
55	P040	I	General-Purpose I/O Port
	SEG24		LCDC Segment(Duty)Output pin
	ST1		LCDC Segment(Static)Output pin
	PPG13_0		PPG Output pin ch.13 relocation 0
	SOT7_0		LIN_UART Serial Output pin ch.7 relocation 0

Pin Number	Pin Name	I/O Circuit Type	Function Description
56	P041	I	General-Purpose I/O Port
	SEG25		LCDC Segment(Duty)Output pin
	ST2		LCDC Segment(Static)Output pin
	PPG14_0		PPG Output pin ch.14 relocation 0
	SCK7_0		LIN_UART Serial Clock I/O pin ch.7 relocation 0
57	VCC5	-	+5.0v Power Supply pin
58	VSS	-	GND pin
59	P042	I	General-Purpose I/O Port
	SEG26		LCDC Segment(Duty)Output pin
	ST3		LCDC Segment(Static)Output pin
	PPG15_0		PPG Output pin ch.15 relocation 0
	AIN0_0		Up/down Counter AIN Input pin ch.0 relocation 0
60	P043	I	General-Purpose I/O Port
	SEG27		LCDC Segment(Duty)Output pin
	ST4		LCDC Segment(Static)Output pin
	BIN0_0		Up/down Counter BIN Input pin ch.0 relocation 0
	SGA4_0		Sound Generator SGA Output pin ch.4 relocation 0
	OCU6_1		Output Compare Output pin ch.6 relocation 1
61	P044	I	General-Purpose I/O Port
	SEG28		LCDC Segment(Duty)Output pin
	ST5		LCDC Segment(Static)Output pin
	ZIN0_0		Up/down Counter ZIN Input pin ch.0 relocation 0
	SGO4_0		Sound Generator SGO Output pin ch.4 relocation 0
	OCU7_1		Output Compare Output pin ch.7 relocation 1
62	P045	I	General-Purpose I/O Port
	SEG29		LCDC Segment(Duty)Output pin
	ST6		LCDC Segment(Static)Output pin
	AIN1_0		Up/down Counter AIN Input pin ch.1 relocation 0
	SIN8_2		Multi-function Serial Input pin ch.8 relocation 2
63	P046	I	General-Purpose I/O Port
	SEG30		LCDC Segment(Duty)Output pin
	ST7		LCDC Segment(Static)Output pin
	BIN1_0		Up/down Counter BIN Input pin ch.1 relocation 0
	SOT8_2		Multi-function Serial Output pin ch.8 relocation 2
64	P047	I	General-Purpose I/O Port
	SEG31		LCDC Segment(Duty)Output pin
	ST8		LCDC Segment(Static)Output pin
	ZIN1_0		Up/down Counter ZIN Input pin ch.1 relocation 0
	SCK8_2		Multi-function Serial Clock I/O pin ch.8 relocation 2
65	P050	I	General-Purpose I/O Port
	COM0		LCDC Segment(Duty)Common Output pin
	OCU8_1		Output Compare Output pin ch.8 relocation 1
66	P051	I	General-Purpose I/O Port
	COM1		LCDC Segment(Duty)Common Output pin
	OCU9_1		Output Compare Output pin ch.9 relocation 1
67	P052	I	General-Purpose I/O Port
	COM2		LCDC Segment(Duty)Common Output pin
	OCU10_1		Output Compare Output pin ch.10 relocation 1

Pin Number	Pin Name	I/O Circuit Type	Function Description
68	P053	I	General-Purpose I/O Port
	COM3		LCDC Segment(Duty)Common Output pin
	OCU11_1		Output Compare Output pin ch.11 relocation 1
69	P054	I2	General-Purpose I/O Port
	V0		LCDC Reference Voltage V0 Input pin
	FRCK0_1		Free-Run Timer Clock Input pin ch.0 relocation 1
70	P055	I2	General-Purpose I/O Port
	V1		LCDC Reference Voltage V1 Input pin
	FRCK1_1		Free-Run Timer Clock Input pin ch.1 relocation 1
71	P056	I2	General-Purpose I/O Port
	V2		LCDC Reference Voltage V2 Input pin
	FRCK2_1		Free-Run Timer Clock Input pin ch.2 relocation 1
72	P057	I3	General-Purpose I/O Port
	V3		LCDC Reference Voltage V3 Input pin
	FRCK3_1		Free-Run Timer Clock Input pin ch.3 relocation 1
73	DVCC	-	Power Supply pin for SMC high current
74	DVSS	-	GND pin for SMC high current
75	P060	K	General-Purpose I/O Port
	PWM1P0		SMC Output pin ch.0
	AN8		ADC Analog Input pin ch.8
76	P061	K	General-Purpose I/O Port
	PWM1M0		SMC Output pin ch.0
	AN9		ADC Analog Input pin ch.9
	SIN1_1		Multi-function Serial Input pin ch.1 relocation 1
77	P062	K	General-Purpose I/O Port
77	PWM2P0	K	SMC Output pin ch.0
	AN10		ADC Analog Input pin ch.10
	SOT1_1		Multi-function Serial Output pin ch.1 relocation 1
	ZIN1_1		Up/down Counter ZIN Input pin ch.1 relocation 1
78	P063	K	General-Purpose I/O Port
	PWM2M0		SMC Output pin ch.0
	AN11		ADC Analog Input pin ch.11
	SCK1_1		Multi-function Serial Clock I/O pin ch.1 relocation 1
	BIN1_1		Up/down Counter BIN Input pin ch.1 relocation 1
79	P064	K	General-Purpose I/O Port
	PWM1P1		SMC Output pin ch.1
	AN12		ADC Analog Input pin ch.12
	SIN0_1		Multi-function Serial Input pin ch.0 relocation 1
	AIN1_1		Up/down Counter AIN Input pin ch.1 relocation 1
80	P065	K	General-Purpose I/O Port
	PWM1M1		SMC Output pin ch.1
	AN13		ADC Analog Input pin ch.13
	SOT0_1		Multi-function Serial Output pin ch.0 relocation 1
	ZIN0_1		Up/down Counter ZIN Input pin ch.0 relocation 1
81	P066	K	General-Purpose I/O Port
	PWM2P1		SMC Output pin ch.1
	AN14		ADC Analog Input pin ch.14
	SCK0_1		Multi-function Serial Clock I/O pin ch.0 relocation 1
	BIN0_1		Up/down Counter BIN Input pin ch.0 relocation 1

Pin Number	Pin Name	I/O Circuit Type	Function Description
82	P067	K	General-Purpose I/O Port
	PWM2M1		SMC Output pin ch.1
	AN15		ADC Analog Input pin ch.15
	SIN9_1		Multi-function Serial Input pin ch.9 relocation 1
	AIN0_1		Up/down Counter AIN Input pin ch.0 relocation 1
83	DVCC	-	Power Supply pin for SMC high current
84	DVSS	-	GND pin for SMC high current
85	P070	K	General-Purpose I/O Port
	PWM1P2		SMC Output pin ch.2
	AN16		ADC Analog Input pin ch.16
	SOT9_1		Multi-function Serial Output pin ch.9 relocation 1
86	P071	K	General-Purpose I/O Port
	PWM1M2		SMC Output pin ch.2
	AN17		ADC Analog Input pin ch.17
	SCK9_1		Multi-function Serial Clock I/O pin ch.9 relocation 1
87	P072	K	General-Purpose I/O Port
	PWM2P2		SMC Output pin ch.2
	AN18		ADC Analog Input pin ch.18
	SIN8_1		Multi-function Serial Input pin ch.8 relocation 1
	ICU11_1		Input Capture Input pin ch.11 relocation 1
88	P073	K	General-Purpose I/O Port
	PWM2M2		SMC Output pin ch.2
	AN19		ADC Analog Input pin ch.19
	SOT8_1		Multi-function Serial Output pin ch.8 relocation 1
	ICU10_1		Input Capture Input pin ch.10 relocation 1
89	P074	K	General-Purpose I/O Port
	PWM1P3		SMC Output pin ch.3
	AN20		ADC Analog Input pin ch.20
	SCK8_1		Multi-function Serial Clock I/O pin ch.8 relocation 1
	ICU9_1		Input Capture Input pin ch.9 relocation 1
	PPG12_1		PPG Output pin ch.12 relocation 1
90	P075	K	General-Purpose I/O Port
	PWM1M3		SMC Output pin ch.3
	AN21		ADC Analog Input pin ch.21
	SIN7_1		LIN_UART Serial Input pin ch.7 relocation 1
	ICU8_1		Input Capture Input pin ch.8 relocation 1
	PPG13_1		PPG Output pin ch.13 relocation 1
91	P076	K	General-Purpose I/O Port
	PWM2P3		SMC Output pin ch.3
	AN22		ADC Analog Input pin ch.22
	SOT7_1		LIN_UART Serial Output pin ch.7 relocation 1
	ICU7_1		Input Capture Input pin ch.7 relocation 1
	PPG14_1		PPG Output pin ch.14 relocation 1
92	P077	K	General-Purpose I/O Port
	PWM2M3		SMC Output pin ch.3
	AN23		ADC Analog Input pin ch.23
	SCK7_1		LIN_UART Serial Clock I/O pin ch.7 relocation 1
	ICU6_1		Input Capture Input pin ch.6 relocation 1
	PPG15_1		PPG Output pin ch.15 relocation 1

Pin Number	Pin Name	I/O Circuit Type	Function Description
93	DVCC	-	Power Supply pin for SMC high current
94	DVSS	-	GND pin for SMC high current
95	P080	K	General-Purpose I/O Port
	PWM1P4		SMC Output pin ch.4
	AN24		ADC Analog Input pin ch.24
	SIN6_0		LIN_UART Serial Input pin ch.6 relocation 0
	PPG16_0		PPG Output pin ch.16 relocation 0
	AIN0_2		Up/down Counter AIN Input pin ch.0 relocation 2
96	P081	K	General-Purpose I/O Port
	PWM1M4		SMC Output pin ch.4
	AN25		ADC Analog Input pin ch.25
	SOT6_0		LIN_UART Serial Output pin ch.6 relocation 0
	PPG17_0		PPG Output pin ch.17 relocation 0
	BIN0_2		Up/down Counter BIN Input pin ch.0 relocation 2
97	P082	K	General-Purpose I/O Port
	PWM2P4		SMC Output pin ch.4
	AN26		ADC Analog Input pin ch.26
	SCK6_0		LIN_UART Serial Clock I/O pin ch.6 relocation 0
	PPG18_0		PPG Output pin ch.18 relocation 0
	ZIN0_2		Up/down Counter ZIN Input pin ch.0 relocation 2
98	P083	K	General-Purpose I/O Port
	PWM2M4		SMC Output pin ch.4
	AN27		ADC Analog Input pin ch.27
	ICU0_2		Input Capture Input pin ch.0 relocation 2
	PPG19_0		PPG Output pin ch.19 relocation 0
99	P084	K	General-Purpose I/O Port
	PWM1P5		SMC Output pin ch.5
	AN28		ADC Analog Input pin ch.28
	ICU1_2		Input Capture Input pin ch.1 relocation 2
	PPG20_0		PPG Output pin ch.20 relocation 0
100	P085	K	General-Purpose I/O Port
	PWM1M5		SMC Output pin ch.5
	AN29		ADC Analog Input pin ch.29
	ICU2_2		Input Capture Input pin ch.2 relocation 2
	PPG21_0		PPG Output pin ch.21 relocation 0
101	P086	K	General-Purpose I/O Port
	PWM2P5		SMC Output pin ch.5
101	AN30	K	ADC Analog Input pin ch.30
	ICU3_2		Input Capture Input pin ch.3 relocation 2
	PPG22_0		PPG Output pin ch.22 relocation 0
102	P087	K	General-Purpose I/O Port
	PWM2M5		SMC Output pin ch.5
	AN31		ADC Analog Input pin ch.31
	ICU4_2		Input Capture Input pin ch.4 relocation 2
	PPG23_0		PPG Output pin ch.23 relocation 0
103	DVCC	-	Power Supply pin for SMC high current
104	DVSS	-	GND pin for SMC high current
105	Non connection	-	Non connection

Pin Number	Pin Name	I/O Circuit Type	Function Description
106	P090	M	General-Purpose I/O Port
	ADTG		ADC External Trigger Input pin
	PPG0_2		PPG Output pin ch.0 relocation 2
107	P100	J	General-Purpose I/O Port
	SIN4_1		LIN_UART Serial Input pin ch.4 relocation 1
	AN0		ADC Analog Input pin ch.0
	TIN0_1		Reload Timer Event Input pin ch.0 relocation 1
	PPG8_0		PPG Output pin ch.8 relocation 0
108	Non connection	-	Non connection
109	P101	J	General-Purpose I/O Port
	SOT4_1		LIN_UART Serial Output pin ch.4 relocation 1
	AN1		ADC Analog Input pin ch.1
	TIN1_1		Reload Timer Event Input pin ch.1 relocation 1
	PPG9_0		PPG Output pin ch.9 relocation 0
110	Non connection	-	Non connection
111	P102	J	General-Purpose I/O Port
	SCK4_1		LIN_UART Serial Clock I/O pin ch.4 relocation 1
	AN2		ADC Analog Input pin ch.2
	TIN2_1		Reload Timer Event Input pin ch.2 relocation 1
	PPG10_0		PPG Output pin ch.10 relocation 0
	ICU6_2		Input Capture Input pin ch.6 relocation 2
112	P103	J	General-Purpose I/O Port
	SIN5_1		LIN_UART Serial Input pin ch.5 relocation 1
	AN3		ADC Analog Input pin ch.3
	TIN3_1		Reload Timer Event Input pin ch.3 relocation 1
	PPG1_1		PPG Output pin ch.1 relocation 1
	ICU7_2		Input Capture Input pin ch.7 relocation 2
113	Non connection	-	Non connection
114	P104	J	General-Purpose I/O Port
	SOT5_1		LIN_UART Serial Output pin ch.5 relocation 1
	AN4		ADC Analog Input pin ch.4
	TOT0_1		Reload Timer Output pin ch.0 relocation 0
	PPG2_1		PPG Output pin ch.2 relocation 1
	ICU8_2		Input Capture Input pin ch.8 relocation 2
115	P105	J	General-Purpose I/O Port
	SCK5_1		LIN_UART Serial Clock I/O pin ch.5 relocation 1
	AN5		ADC Analog Input pin ch.5
	TOT1_1		Reload Timer Output pin ch.1 relocation 1
	PPG3_1		PPG Output pin ch.3 relocation 1
	ICU9_2		Input Capture Input pin ch.9 relocation 2
116	Non connection	-	Non connection
117	P106	J	General-Purpose I/O Port
	AN6		ADC Analog Input pin ch.6
	PPG4_1		PPG Output pin ch.4 relocation 1
117	ICU10_2	J	Input Capture Input pin ch.10 relocation 2
	SGA4_1		Sound Generator SGA Output pin ch.4 relocation 1

Pin Number	Pin Name	I/O Circuit Type	Function Description
118	P107	L	General-Purpose I/O Port
	AN7		ADC Analog Input pin ch.7
	PPG5_1		PPG Output pin ch.5 relocation 1
	DAO1		DAC Output pin ch.1
	ICU11_2		Input Capture Input pin ch.11 relocation 2
	SGO4_1		Sound Generator SGO Output pin ch.4 relocation 1
119	Non connection	-	Non connection
120	AVSS	-	ADC, DAC GND pin
	AVRL		ADC Low Reference Voltage pin
121	AVRH	-	ADC High Reference Voltage pin
122	AVCC	-	ADC,DAC Analog Power Supply pin
123	Non connection	-	Non connection
124	P123	L	General-Purpose I/O Port
	OCU1_0		Output Compare Output pin ch.1 relocation 0
	PPG8_2		PPG Output pin ch.8 relocation 2
	DAO0		DAC Output pin ch.0
	AN39		ADC Analog Input pin ch.39
125	P122	J	General-Purpose I/O Port
	OCU0_0		Output Compare Output pin ch.0 relocation 0
	SCK5_0		LIN_UART Serial Clock I/O pin ch.5 relocation 0
	TOT3_0		Reload Timer Output pin ch.3 relocation 0
	PPG7_2		PPG Output pin ch.7 relocation 2
	AN38		ADC Analog Input pin ch.38
126	P121	J	General-Purpose I/O Port
	FRCK0_0		Free-Run Timer Clock Input pin ch.0 relocation 0
	SOT5_0		LIN_UART Serial Output pin ch.5 relocation 0
	INT7_0		External Interrupt Request Input pin ch.7 relocation 0
	TOT2_0		Reload Timer Output pin ch.2 relocation 0
	PPG6_2		PPG Output pin ch.6 relocation 2
	AN37		ADC Analog Input pin ch.37
127	P120	J	General-Purpose I/O Port
	FRCK1_0		Free-Run Timer Clock Input pin ch.1 relocation 0
	SIN5_0		LIN_UART Serial Input pin ch.5 relocation 0
	INT6_0		External Interrupt Request Input pin ch.6 relocation 0
	TOT1_0		Reload Timer Output pin ch.1 relocation 0
	PPG5_2		PPG Output pin ch.5 relocation 2
	AN36		ADC Analog Input pin ch.36
128	P117	J	General-Purpose I/O Port
	SCK4_0		LIN_UART Serial Clock I/O pin ch.4 relocation 0
	TOT0_0		Reload Timer Output pin ch.0 relocation 0
	SGO3		Sound Generator SGO Output pin ch.3
	FRCK2_0		Free-Run Timer Clock Input pin ch.2 relocation 0
	AN35		ADC Analog Input pin ch.35
	TRG4		PPG Trigger Input pin 4 (ch.16-ch.19)
129	P116	J	General-Purpose I/O Port
	SOT4_0		LIN_UART Serial Output pin ch.4 relocation 0
	TIN3_0		Reload Timer Event Input pin ch.3 relocation 0
	SGA3		Sound Generator SGA Output pin ch.3
	FRCK3_0		Free-Run Timer Clock Input pin ch.3 relocation 0
	AN34		ADC Analog Input pin ch.34

Pin Number	Pin Name	I/O Circuit Type	Function Description
130	P115	J	General-Purpose I/O Port
	SIN4_0		LIN_UART Serial Input pin ch.4 relocation 0
	TIN2_0		Reload Timer Event Input pin ch.2 relocation 0
130	SGO2	J	Sound Generator SGO Output pin ch.2
	FRCK4_0		Free-Run Timer Clock Input pin ch.4 relocation 0
	AN33		ADC Analog Input pin ch.33
131	P114	J	General-Purpose I/O Port
	SCK3_0		LIN_UART Serial Clock I/O pin ch.3 relocation 0
	TIN1_0		Reload Timer Event Input pin ch.1 relocation 0
	ICU5_1		Input Capture Input pin ch.5 relocation 1
	SGA2		Sound Generator SGA Output pin ch.2
	AN32		ADC Analog Input pin ch.32
	TRG3		PPG Trigger Input pin 3 (ch.12-ch.15)
132	P000	M	General-Purpose I/O Port
	SIN2_1		LIN_UART Serial Input pin ch.2 relocation 1
	TIN0_2		Reload Timer Event Input pin ch.0 relocation 2
	PPG0_0		PPG Output pin ch.0 relocation 0
	INT0_1		External Interrupt Request Input pin ch.0 relocation 1
133	P001	M	General-Purpose I/O Port
	SOT2_1		LIN_UART Serial Output pin ch.2 relocation 1
	TIN1_2		Reload Timer Event Input pin ch.1 relocation 2
	PPG1_0		PPG Output pin ch.1 relocation 0
	INT1_1		External Interrupt Request Input pin ch.1 relocation 1
134	P002	M	General-Purpose I/O Port
	SCK2_1		LIN_UART Serial Clock I/O pin ch.2 relocation 1
	TIN2_2		Reload Timer Event Input pin ch.2 relocation 2
	PPG2_0		PPG Output pin ch.2 relocation 0
	INT2_1		External Interrupt Request Input pin ch.2 relocation 1
135	P003	M	General-Purpose I/O Port
	SIN3_1		LIN_UART Serial Input pin ch.3 relocation 1
	TIN3_2		Reload Timer Event Input pin ch.3 relocation 2
	PPG3_0		PPG Output pin ch.3 relocation 0
	INT3_1		External Interrupt Request Input pin ch.3 relocation 1
136	VCC5	-	+5.0v Power Supply pin
137	VSS	-	GND pin
138	P137	M(Y)	General-Purpose I/O Port
	(X0A)		Sub Clock oscillation Input pin (only dual clock product)
139	P136	M(Y)	General-Purpose I/O Port
	(X1A)		Sub Clock oscillation Output pin (only dual clock product)
140	NMIX	R	NMI Pin
141	P004	M	General-Purpose I/O Port
	SOT3_1		LIN_UART Serial Output pin ch.3 relocation 1
	TOT0_2		Reload Timer Output pin ch.0 relocation 2
	PPG4_0		PPG Output pin ch.4 relocation 0
	INT4_1		External Interrupt Request Input pin ch.4 relocation 1
142	P005	M	General-Purpose I/O Port
	SCK3_1		LIN_UART Serial Clock I/O pin ch.3 relocation 1
	TOT1_2		Reload Timer Output pin ch.1 relocation 2
	PPG5_0		PPG Output pin ch.5 relocation 0
	INT5_1		External Interrupt Request Input pin ch.5 relocation 1

Pin Number	Pin Name	I/O Circuit Type	Function Description
143	P006	M	General-Purpose I/O Port
	TOT2_2		Reload Timer Output pin ch.2 relocation 2
	PPG6_0		PPG Output pin ch.6 relocation 0
	INT6_1		External Interrupt Request Input pin ch.6 relocation 1
144	P007	M	General-Purpose I/O Port
	TOT3_2		Reload Timer Output pin ch.3 relocation 2
	PPG7_0		PPG Output pin ch.7 relocation 0
	INT7_1		External Interrupt Request Input pin ch.7 relocation 1
145	Non connection	-	Non connection
146	P097	M	General-Purpose I/O Port
	WOT		RTC Overflow Output pin
	SOT3_0		LIN_UART Serial Output pin ch.3 relocation 0
	INT8_0		External Interrupt Request Input pin ch.8 relocation 0
	TIN0_0		Reload Timer Event Input pin ch.0 relocation 0
	ICU4_1		Input Capture Input pin ch.4 relocation 1
	PPG0_1		PPG Output pin ch.0 relocation 1
147	P094	M	General-Purpose I/O Port
	SGO1		Sound Generator SGO Output pin ch.1
	SIN3_0		LIN_UART Serial Input pin ch.3 relocation 0
	INT15_0		External Interrupt Request Input pin ch.15 relocation 0
	ICU1_1		Input Capture Input pin ch.1 relocation 1
	PPG9_1		PPG Output pin ch.9 relocation 1
148	P093	M	General-Purpose I/O Port
	SGA1		Sound Generator SGA Output pin ch.1
	SOT2_0		LIN_UART Serial Output pin ch.2 relocation 0
	INT14_0		External Interrupt Request Input pin ch.14 relocation 0
	ICU3_1		Input Capture Input pin ch.3 relocation 1
	PPG8_1		PPG Output pin ch.8 relocation 1
149	P092	M	General-Purpose I/O Port
	SGO0		Sound Generator SGO Output pin ch.0
	SCK2_0		LIN_UART Serial Clock I/O pin ch.0 relocation 0
	INT13_0		External Interrupt Request Input pin ch.13 relocation 0
	TOT3_1		Reload Timer Output pin ch.3 relocation 1
	ICU0_1		Input Capture Input pin ch.0 relocation 1
	PPG7_1		PPG Output pin ch.7 relocation 1
150	P091	M	General-Purpose I/O Port
	SGA0		Sound Generator SGA Output pin ch.0
	SIN2_0		LIN_UART Serial Input pin ch.2 relocation 0
	INT12_0		External Interrupt Request Input pin ch.12 relocation 0
	TOT2_1		Reload Timer Output pin ch.2 relocation 1
	ICU2_1		Input Capture Input pin ch.2 relocation 1
	PPG6_1		PPG Output pin ch.6 relocation 1
151	P110	M	General-Purpose I/O Port
	TX1		CAN TX Data Output pin ch.1
	PPG1_2		PPG Output pin ch.1 relocation 2
	FRCK5_0		Free-Run Timer Clock Input pin ch.5 relocation 0
152	P111	M	General-Purpose I/O Port
	RX1		CAN RX Data Input pin ch.1
	INT10_0		External Interrupt Request Input pin ch.10 relocation 0
	PPG2_2		PPG Output pin ch.2 relocation 2

Pin Number	Pin Name	I/O Circuit Type	Function Description
153	P112	M	General-Purpose I/O Port
	TX2		CAN TX Data Output pin ch.2
	PPG3_2		PPG Output pin ch.3 relocation 2
154	P113	M	General-Purpose I/O Port
	RX2		CAN RX Data Input pin ch.2
	INT11_0		External Interrupt Request Input pin ch.11 relocation 0
	PPG4_2		PPG Output pin ch.4 relocation 2
155	RSTX	R	Reset Pin
156	VCC5	-	+5.0v Power Supply pin
157	VSS	-	GND pin
158	DEBUGIF	B	DEBUG I/F pin
159	P095	M	General-Purpose I/O Port
	TX0		CAN TX Data Output pin ch.0
	PPG10_1		PPG Output pin ch.10 relocation 1
160	P096	M	General-Purpose I/O Port
	RX0		CAN RX Data Input pin ch.0
	INT9_0		External Interrupt Request Input pin ch.9 relocation 0
161	P124	M	General-Purpose I/O Port
	OCU2_0		Output Compare Output pin ch.2 relocation 0
	ICU5_2		Input Capture Input pin ch.5 relocation 2
	PPG9_2		PPG Output pin ch.9 relocation 2
162	Non connection	-	Non connection
163	Non connection	-	Non connection
164	Non connection	-	Non connection
165	Non connection	-	Non connection
166	MD0	A	Mode Pin 0
167	MD1	A	Mode Pin 1
168	MD2	R2	Mode Pin 2
169	X0	X	Main Clock oscillation Input pin
170	X1	X	Main Clock oscillation Output pin
171	VSS	-	GND pin
172	P125	M	General-Purpose I/O Port
	OCU3_0		Output Compare Output pin ch.3 relocation 0
	ICU0_0		Input Capture Input pin ch.0 relocation 0
	PPG10_2		PPG Output pin ch.10 relocation 2
173	P126	M	General-Purpose I/O Port
	TRG0		PPG Trigger Input pin 0 (ch.0-ch.3)
	SIN0_0		Multi-function Serial Input pin ch.0 relocation 0
	INT1_0		External Interrupt Request Input pin ch.1 relocation 0
	OCU4_0		Output Compare Output pin ch.4 relocation 0
174	P127	N	General-Purpose I/O Port
	SOT0_0		Multi-function Serial Output pin ch.0 relocation 0
	OCU5_0		Output Compare Output pin ch.5 relocation 0
175	P130	N	General-Purpose I/O Port
	SCK0_0		Multi-function Serial Clock I/O pin ch.0 relocation 0
	INT0_0		External Interrupt Request Input pin ch.0 relocation 0
	ICU1_0		Input Capture Input pin ch.1 relocation 0
	TIOA0		Base Timer I/O pin ch.0

Pin Number	Pin Name	I/O Circuit Type	Function Description
176	P131	M	General-Purpose I/O Port
	TRG1		PPG Trigger Input pin 1 (ch.4-ch.7)
	SIN1_0		Multi-function Serial Input pin ch.1 relocation 0
	INT4_0		External Interrupt Request Input pin ch.4 relocation 0
	ICU2_0		Input Capture Input pin ch.2 relocation 0
	TIOA1		Base Timer I/O pin ch.1
177	P132	N	General-Purpose I/O Port
	SOT1_0		Multi-function Serial Output pin ch.1 relocation 0
	INT2_0		External Interrupt Request Input pin ch.2 relocation 0
	ICU3_0		Input Capture Input pin ch.3 relocation 0
	TIOB0		Base Timer I/O pin ch.0
178	P133	N	General-Purpose I/O Port
	SCK1_0		Multi-function Serial Clock I/O pin ch.1 relocation 0
	INT3_0		External Interrupt Request Input pin ch.3 relocation 0
	ICU4_0		Input Capture Input pin ch.4 relocation 0
	TIOB1		Base Timer I/O pin ch.1
	TRG5		PPG Trigger Input pin 5 (ch.20-ch.23)
	PPG11_1		PPG Output pin ch.11 relocation 1
179	P134	M	General-Purpose I/O Port
	TRG2		PPG Trigger Input pin 2 (ch.8-ch.11)
	INT5_0		External Interrupt Request Input pin ch.5 relocation 0
	ICU5_0		Input Capture Input pin ch.5 relocation 0
	PPG1_3		PPG Output pin ch.1 relocation 3
180	VCC5	-	+5.0v Power Supply pin
181	VSS	-	GND pin
182	C	-	External Capacitance Connection Pin
183	P140	M2	General-Purpose I/O Port
	D16_0		External Bus Data I/O pin
	D24_1		External Bus Data I/O pin
184	P141	M2	General-Purpose I/O Port
	D17_0		External Bus Data I/O pin
	D25_1		External Bus Data I/O pin
185	P142	M2	General-Purpose I/O Port
	D18_0		External Bus Data I/O pin
	D26_1		External Bus Data I/O pin
186	P143	M2	General-Purpose I/O Port
	D19_0		External Bus Data I/O pin
	D27_1		External Bus Data I/O pin
187	P144	M2	General-Purpose I/O Port
	D20_0		External Bus Data I/O pin
	D28_1		External Bus Data I/O pin
188	P145	M2	General-Purpose I/O Port
	D21_0		External Bus Data I/O pin
	D29_1		External Bus Data I/O pin
189	P146	M2	General-Purpose I/O Port
	D22_0		External Bus Data I/O pin
	D30_1		External Bus Data I/O pin
190	P147	M2	General-Purpose I/O Port
	D23_0		External Bus Data I/O pin
	D31_1		External Bus Data I/O pin

Pin Number	Pin Name	I/O Circuit Type	Function Description
191	P150	M2	General-Purpose I/O Port
	D24_0		External Bus Data I/O pin
	D16_1		External Bus Data I/O pin
192	P151	M2	General-Purpose I/O Port
	D25_0		External Bus Data I/O pin
	D17_1		External Bus Data I/O pin
193	P152	M2	General-Purpose I/O Port
	D26_0		External Bus Data I/O pin
	D18_1		External Bus Data I/O pin
194	P153	M2	General-Purpose I/O Port
	D27_0		External Bus Data I/O pin
	D19_1		External Bus Data I/O pin
195	P154	M2	General-Purpose I/O Port
	D28_0		External Bus Data I/O pin
	D20_1		External Bus Data I/O pin
196	P155	M2	General-Purpose I/O Port
	D29_0		External Bus Data I/O pin
	D21_1		External Bus Data I/O pin
197	P156	M2	General-Purpose I/O Port
	D30_0		External Bus Data I/O pin
	D22_1		External Bus Data I/O pin
198	P157	M2	General-Purpose I/O Port
	D31_0		External Bus Data I/O pin
	D23_1		External Bus Data I/O pin
199	P160	M2	General-Purpose I/O Port
	ASX		External Bus Address-Strobe Output pin
200	P161	M2	General-Purpose I/O Port
	CS0X		External Bus Chip-Select 0 Output pin
201	P162	M2	General-Purpose I/O Port
	CS1X		External Bus Chip-Select 1 Output pin
202	P163	M2	General-Purpose I/O Port
	RDX		External Bus Read-Strobe Output pin
203	P164	M2	General-Purpose I/O Port
	WR0X		External Bus Write-Strobe 0 Output pin
204	P165	M2	General-Purpose I/O Port
	WR1X		External Bus Write-Strobe 1 Output pin
205	P166	M2	General-Purpose I/O Port
	A00		External Bus Address Output pin
206	P167	M2	General-Purpose I/O Port
	A01		External Bus Address Output pin
207	P170	M2	General-Purpose I/O Port
	A02		External Bus Address Output pin
208	VSS	-	GND pin

6. I/O Circuit Type

Type	Circuit	Remarks
H	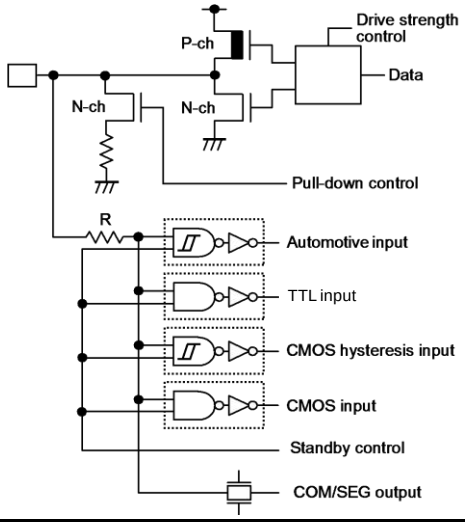	General-purpose I/O port with COM/SEG output and with against 3V pad power supply (5V tolerant). IOH = -1/-2mA(@VCCE = 5V), IOH = -0.5/-1/-2mA(@VCCE = 3.3V), IOL = 1/2mA(@VCCE = 5V), IOL = 0.5/1/2mA(@VCCE = 3.3V) Pull-down resistor control Automotive level input TTL level input CMOS level hysteresis input CMOS level input
I	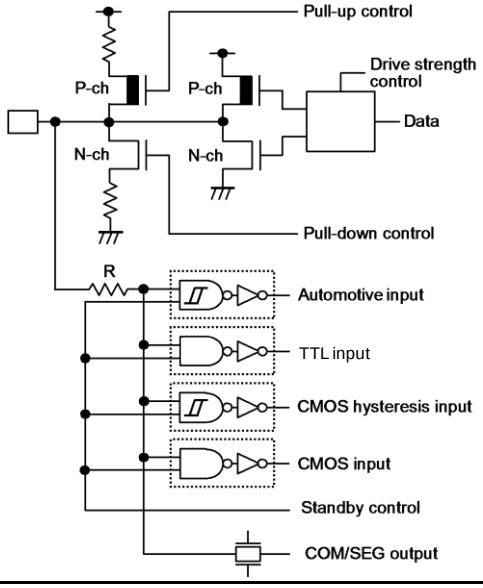	General-purpose I/O port with COM/SEG output. IOH = -1/-2mA, IOL = 1/2mA Pull-up resistor control Pull-down resistor control Automotive level input TTL level input CMOS level hysteresis input CMOS level input

Type	Circuit	Remarks
I2	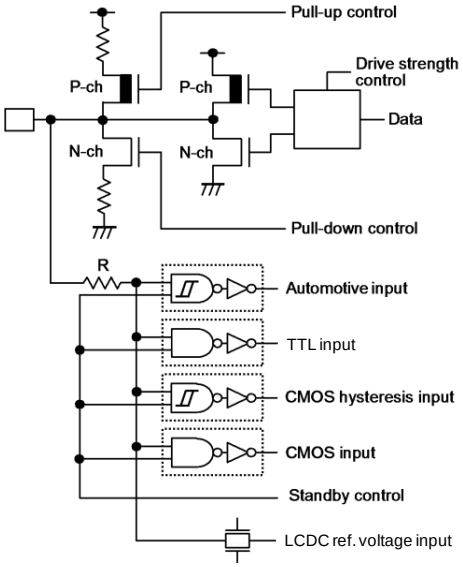	General-purpose I/O port with LCDC reference voltage input IOH = -1/-2mA, IOL = 1/2mA Pull-up resistor control Pull-down resistor control Automotive level input TTL level input CMOS level hysteresis input CMOS level input
I3	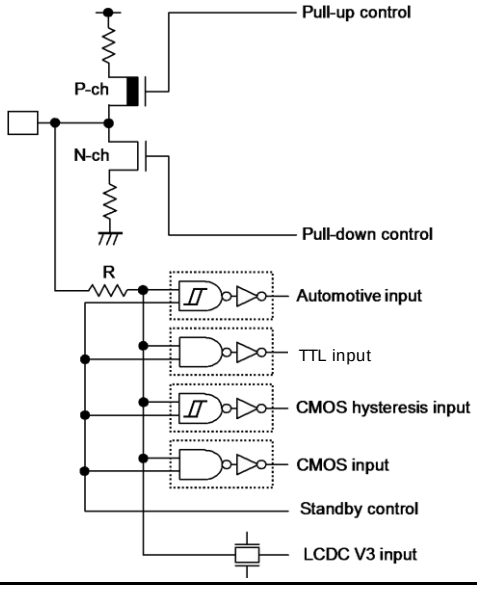	General-purpose input port with LCDC V3 input Pull-up resistor control Pull-down resistor control Automotive level input TTL level input CMOS level hysteresis input CMOS level input

Type	Circuit	Remarks
I4	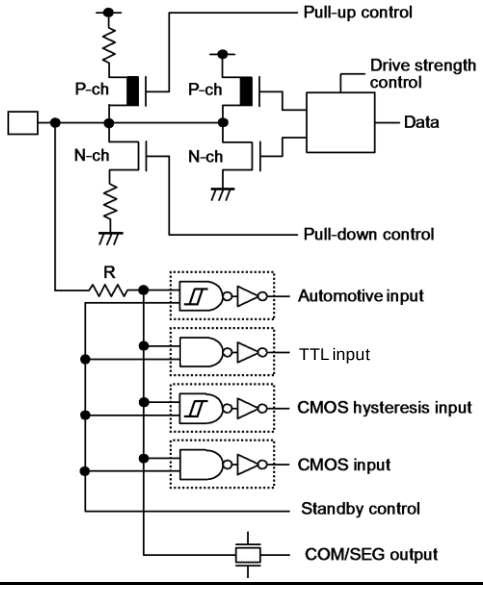	General-purpose I/O port with COM/SEG output. IOH = -1/-2mA(@VCCE = 5V), IOH = -0.5/-1mA(@VCCE = 3.3V), IOL = 1/2mA(@VCCE = 5V), IOL = 0.5/1mA(@VCCE = 3.3V) Pull-up resistor control Pull-down resistor control Automotive level input TTL level input CMOS level hysteresis input CMOS level input
J	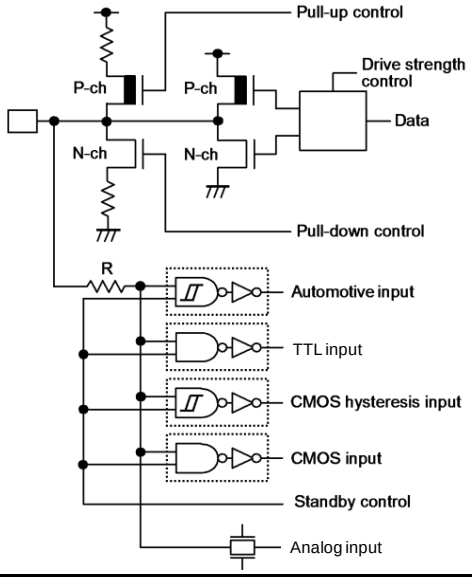	General-purpose I/O port with analog input. IOH = -1/-2mA, IOL = 1/2mA Pull-up resistor control Pull-down resistor control Automotive level input TTL level input CMOS level hysteresis input CMOS level input

Type	Circuit	Remarks
K	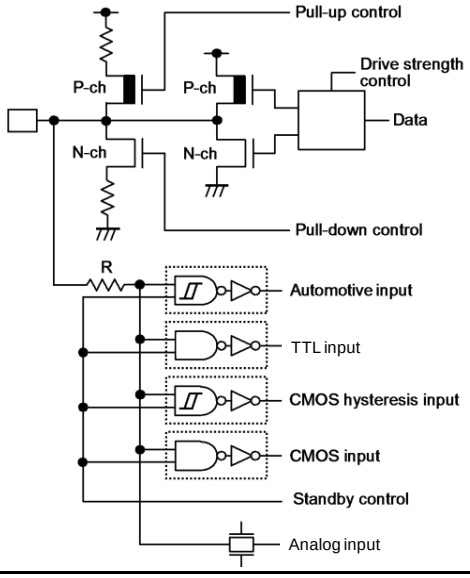	General-purpose I/O port with analog input and with high current capable for SMC. IOH = -1/-2/-30mA, IOL = 1/2/30mA Pull-up resistor control Pull-down resistor control Automotive level input TTL level input CMOS level hysteresis input CMOS level input
L	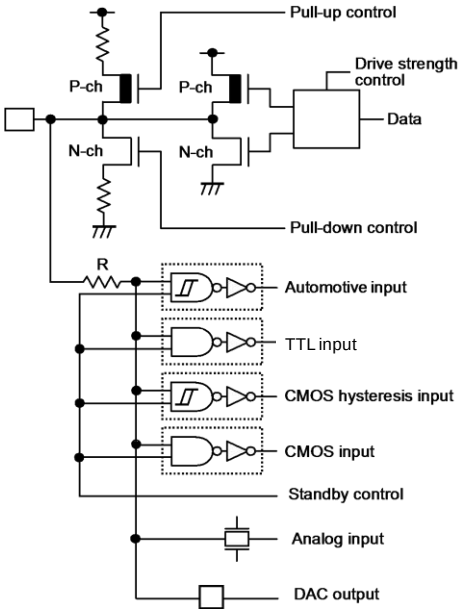	General-purpose I/O port with analog input and with DAC output IOH = -1/-2mA, IOL = 1/2mA Pull-up resistor control Pull-down resistor control Automotive level input TTL level input CMOS level hysteresis input CMOS level input

Type	Circuit	Remarks
M	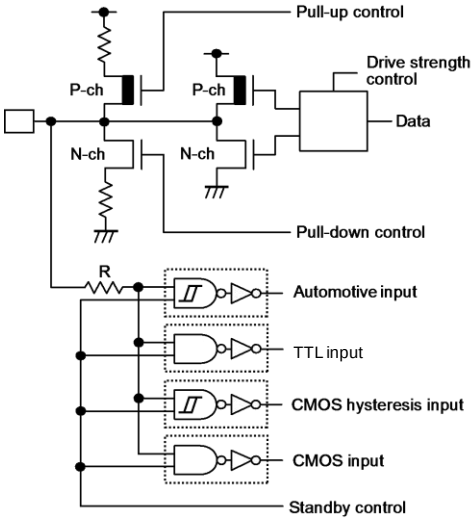	General-purpose I/O port. IOH = -1/-2mA, IOL = 1/2mA Pull-up resistor control Pull-down resistor control Automotive level input TTL level input CMOS level hysteresis input CMOS level input
M2	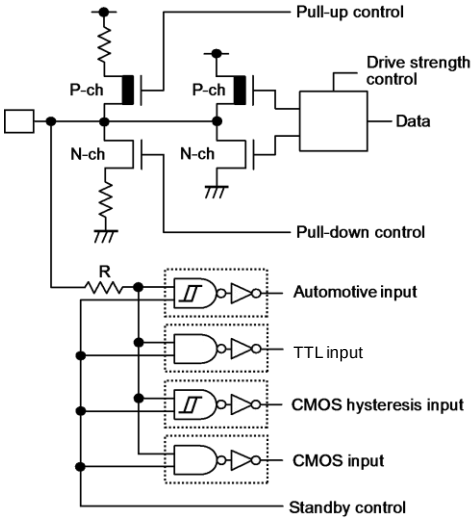	General-purpose I/O port. IOH = -1/-2mA(@VCCE = 5V), IOH = -0.5/-1mA(@VCCE = 3.3V), IOL = 1/2mA(@VCCE = 5V), IOL = 0.5/1mA(@VCCE = 3.3V) Pull-up resistor control Pull-down resistor control Automotive level input TTL level input CMOS level hysteresis input CMOS level input
N	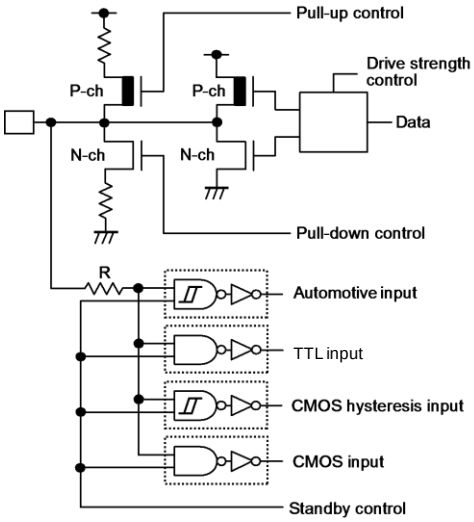	General-purpose I/O port with I^2C output IOH = -1/-2/-3mA, IOL = 1/2/3mA Pull-up resistor control Pull-down resistor control Automotive level input TTL level input CMOS level hysteresis input CMOS level input

Type	Circuit	Remarks
A	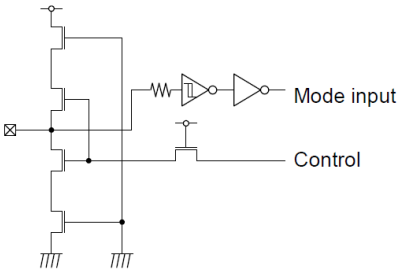	Mode pin
B	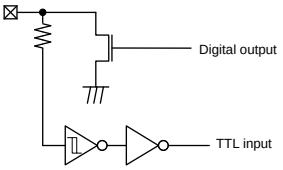	DEBUG I/F pin
R	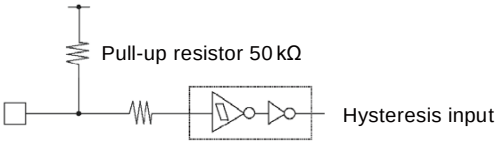	CMOS level hysteresis input
R2	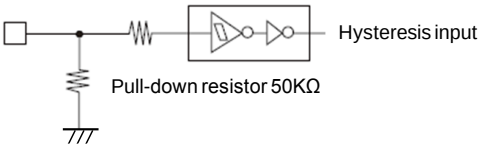	CMOS level hysteresis input
X	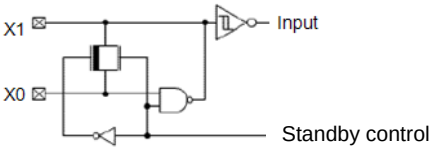	Main oscillation I/O
Y	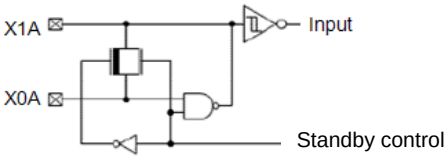	Sub oscillation I/O

7. Handling Precautions

Any semiconductor devices have inherently a certain rate of failure. The possibility of failure is greatly affected by the conditions in which they are used (circuit conditions, environmental conditions, etc.). This page describes precautions that must be observed to minimize the chance of failure and to obtain higher reliability from your Cypress semiconductor devices.

7.1 Precautions for Product Design

This section describes precautions when designing electronic equipment using semiconductor devices.

Absolute Maximum Ratings

Semiconductor devices can be permanently damaged by application of stress (voltage, current, temperature, etc.) in excess of certain established limits, called absolute maximum ratings. Do not exceed these ratings.

Recommended Operating Conditions

Recommended operating conditions are normal operating ranges for the semiconductor device. All the device's electrical characteristics are warranted when operated within these ranges.

Always use semiconductor devices within the recommended operating conditions. Operation outside these ranges may adversely affect reliability and could result in device failure.

No warranty is made with respect to uses, operating conditions, or combinations not represented on the data sheet. Users considering application outside the listed conditions are advised to contact their sales representative beforehand.

Processing and Protection of Pins

These precautions must be followed when handling the pins which connect semiconductor devices to power supply and input/output functions.

1. Preventing Over-Voltage and Over-Current Conditions

   Exposure to voltage or current levels in excess of maximum ratings at any pin is likely to cause deterioration within the device, and in extreme cases leads to permanent damage of the device. Try to prevent such overvoltage or over-current conditions at the design stage.
2. Protection of Output Pins

   Shorting of output pins to supply pins or other output pins, or connection to large capacitance can cause large current flows. Such conditions if present for extended periods of time can damage the device.
   Therefore, avoid this type of connection.
3. Handling of Unused Input Pins

   Unconnected input pins with very high impedance levels can adversely affect stability of operation. Such pins should be connected through an appropriate resistance to a power supply pin or ground pin.

Latch-up

Semiconductor devices are constructed by the formation of P-type and N-type areas on a substrate. When subjected to abnormally high-voltages, internal parasitic PNPN junctions (called thyristor structures) may be formed, causing large current levels in excess of several hundred mA to flow continuously at the power supply pin. This condition is called latch-up.

CAUTION: The occurrence of latch-up not only causes loss of reliability in the semiconductor device, but can cause injury or damage from high heat, smoke or flame. To prevent this from happening, do the following:

1. Be sure that voltages applied to pins do not exceed the absolute maximum ratings. This should include attention to abnormal noise, surge levels, etc.
2. Be sure that abnormal current flows do not occur during the power-on sequence.

Observance of Safety Regulations and Standards

Most countries in the world have established standards and regulations regarding safety, protection from electromagnetic interference, etc. Customers are requested to observe applicable regulations and standards in the design of products.

Fail-Safe Design

Any semiconductor devices have inherently a certain rate of failure. You must protect against injury, damage or loss from such failures by incorporating safety design measures into your facility and equipment such as redundancy, fire protection, and prevention of over-current levels and other abnormal operating conditions.

Precautions Related to Usage of Devices

Cypress semiconductor devices are intended for use in standard applications (computers, office automation and other office equipment, industrial, communications, and measurement equipment, personal or household devices, etc.).

CAUTION: Customers considering the use of our products in special applications where failure or abnormal operation may directly affect human lives or cause physical injury or property damage, or where extremely high levels of reliability are demanded (such as aerospace systems, atomic energy controls, sea floor repeaters, vehicle operating controls, medical devices for life support, etc.) are requested to consult with sales representatives before such use. The company will not be responsible for damages arising from such use without prior approval.

7.2 Precautions for Package Mounting

Package mounting may be either lead insertion type or surface mount type. In either case, for heat resistance during soldering, you should only mount under Cypress's recommended conditions. For detailed information about mount conditions, contact your sales representative.

Lead Insertion Type

Mounting of lead insertion type packages onto printed circuit boards may be done by two methods: direct soldering on the board, or mounting by using a socket.

Direct mounting onto boards normally involves processes for inserting leads into through-holes on the board and using the flow soldering (wave soldering) method of applying liquid solder. In this case, the soldering process usually causes leads to be subjected to thermal stress in excess of the absolute ratings for storage temperature. Mounting processes should conform to Cypress recommended mounting conditions.

If socket mounting is used, differences in surface treatment of the socket contacts and IC lead surfaces can lead to contact deterioration after long periods. For this reason it is recommended that the surface treatment of socket contacts and IC leads be verified before mounting.

Surface Mount Type

Surface mount packaging has longer and thinner leads than lead-insertion packaging, and therefore leads are more easily deformed or bent. The use of packages with higher pin counts and narrower pin pitch results in increased susceptibility to open connections caused by deformed pins, or shorting due to solder bridges.

You must use appropriate mounting techniques. Cypress recommends the solder reflow method, and has established a ranking of mounting conditions for each product. Users are advised to mount packages in accordance with Cypress ranking of recommended conditions.

Lead-Free Packaging

CAUTION: When ball grid array (BGA) packages with Sn-Ag-Cu balls are mounted using Sn-Pb eutectic soldering, junction strength may be reduced under some conditions of use.

Storage of Semiconductor Devices

Because plastic chip packages are formed from plastic resins, exposure to natural environmental conditions will cause absorption of moisture. During mounting, the application of heat to a package that has absorbed moisture can cause surfaces to peel, reducing moisture resistance and causing packages to crack. To prevent, do the following:

1. Avoid exposure to rapid temperature changes, which cause moisture to condense inside the product. Store products in locations where temperature changes are slight.
2. Use dry boxes for product storage. Products should be stored below 70% relative humidity, and at temperatures between 5°C and 30°C.
   When you open Dry Package that recommends humidity 40% to 70% relative humidity.
3. When necessary, Cypress packages semiconductor devices in highly moisture-resistant aluminum laminate bags, with a silica gel desiccant. Devices should be sealed in their aluminum laminate bags for storage.
4. Avoid storing packages where they are exposed to corrosive gases or high levels of dust.

Baking

Packages that have absorbed moisture may be de-moisturized by baking (heat drying). Follow the Cypress recommended conditions for baking.

Condition: 125°C/24 h

Static Electricity

Because semiconductor devices are particularly susceptible to damage by static electricity, you must take the following precautions:

1. Maintain relative humidity in the working environment between 40% and 70%. Use of an apparatus for ion generation may be needed to remove electricity.
2. Electrically ground all conveyors, solder vessels, soldering irons and peripheral equipment.
3. Eliminate static body electricity by the use of rings or bracelets connected to ground through high resistance (on the level of 1 MΩ).
   Wearing of conductive clothing and shoes, use of conductive floor mats and other measures to minimize shock loads is recommended.
4. Ground all fixtures and instruments, or protect with anti-static measures.
5. Avoid the use of styrofoam or other highly static-prone materials for storage of completed board assemblies.

7.3 Precautions for Use Environment

Reliability of semiconductor devices depends on ambient temperature and other conditions as described above.

For reliable performance, do the following:

1. Humidity

   Prolonged use in high humidity can lead to leakage in devices as well as printed circuit boards. If high humidity levels are anticipated, consider anti-humidity processing.
2. Discharge of Static Electricity

   When high-voltage charges exist close to semiconductor devices, discharges can cause abnormal operation. In such cases, use anti-static measures or processing to prevent discharges.
3. Corrosive Gases, Dust, or Oil

   Exposure to corrosive gases or contact with dust or oil may lead to chemical reactions that will adversely affect the device. If you use devices in such conditions, consider ways to prevent such exposure or to protect the devices.
4. Radiation, Including Cosmic Radiation

   Most devices are not designed for environments involving exposure to radiation or cosmic radiation. Users should provide shielding as appropriate.
5. Smoke, Flame

   CAUTION: Plastic molded devices are flammable, and therefore should not be used near combustible substances. If devices begin to smoke or burn, there is danger of the release of toxic gases.

Customers considering the use of Cypress products in other special environmental conditions should consult with sales representatives.

8. Handling Devices

This section explains the latch-up prevention and the treatment of a pin.

For latch-up prevention

If a voltage higher than VCC or a voltage lower than VSS is applied to an I/O pin, or if a voltage exceeding the ratings is applied between VCC pin and VSS pin, a latch-up may occur in CMOS IC. If the latch-up occurs, the power supply current increases excessively and device elements may be damaged by heat. Take care to prevent any voltage from exceeding the maximum ratings in device application.

Also, the analog power supply voltage (AVcc, AVRH), analog input ,and the power supply voltage to high-current output buffer pins (DVcc), the power supply voltage of external bus interface (VccE) must not be exceed the digital power supply voltage (Vcc5) when the power supply voltage to the analog system and high-current output buffer pins the power supply voltage of external bus interface (VccE) is turned on or off.

In the correct power-on sequence, turn on the digital power supply voltage (Vcc5), analog power supply voltage (AVcc, AVRH), the power supply voltage of external bus interface (VccE), and the power supply voltage of high-current output buffer pins (DVcc) simultaneously. Or, turn on the digital power supply voltage (Vcc5), and then turn on analog power supply voltage (AVcc, AVRH), the power supply voltage of external bus interface (VccE), and the power supply voltage of high-current output buffer pins (DVcc).

Treatment of unused pins

If unused input pins are left open, they may cause a permanent damage to the device due to malfunction or latch-up. Connect a 2kΩ resistor to each of unused pins for pull-up or pull-down connection.

Also, if I/O pins are not used, they must be set to the output state for opening or they must be set to the input state and treated in the same way as for the input pins.

Power supply pins

The device is designed to ensure that if the device contains multiple VCC pin or VSS pin, the pins that should be at the same potential are interconnected to prevent latch-up or other malfunctions. Further, connect these pins to an external power source or ground to reduce unwanted radiation, prevent strobe signals from malfunctioning due to a raised ground level, and fulfill the total output current standard, etc. As shown in figure 1, all Vss power supply pins must be treated in the similar way. If multiple Vcc or Vss systems are connected, the device cannot operate correctly even within the guaranteed operating range.

Figure 1. Power Supply Input Pins

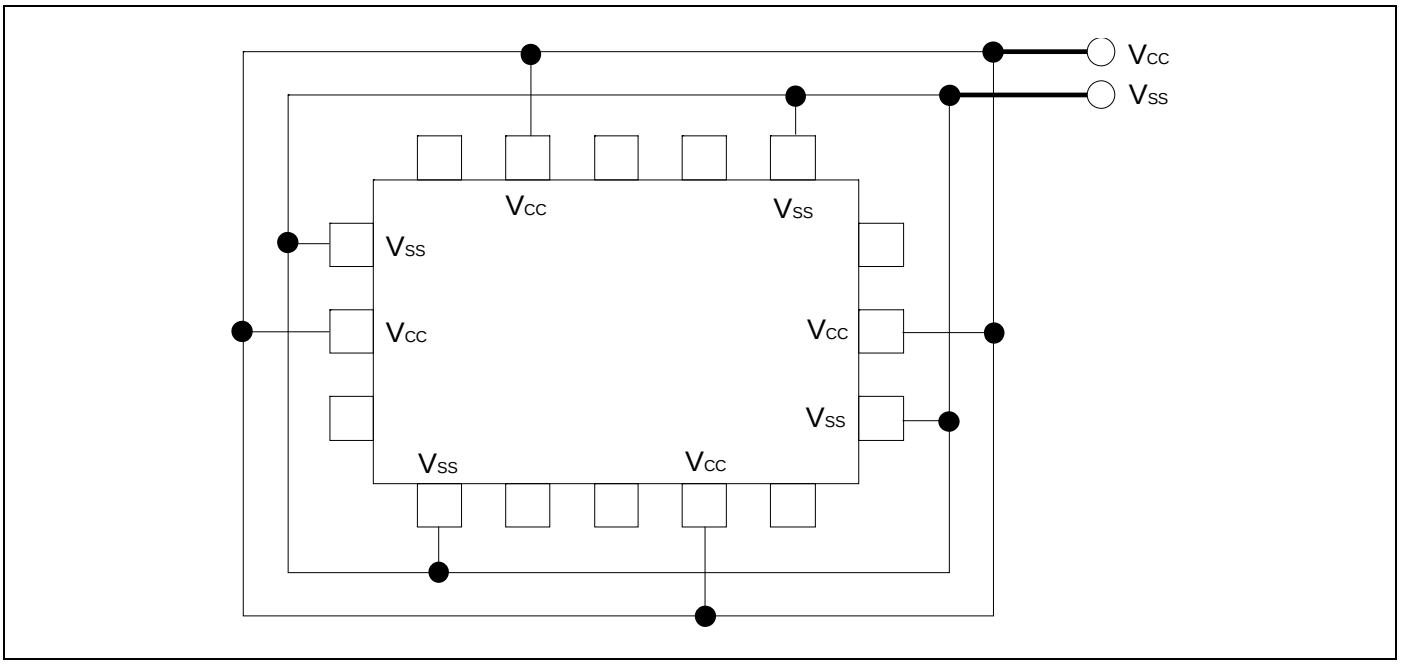

The power supply pins should be connected to VCC pin and VSS pin of this device at the low impedance from the power supply source.

In the area close to this device, a ceramic capacitor having the capacitance larger than the capacitor of C pin is recommended to use as a bypass capacitor between the VCC pin and the VSS pin.

Crystal oscillation circuit

An external noise to the X0 pin or X1 pin may cause a device malfunction. The printed circuit board must be designed to lay out the X0 pin and the X1 pin, crystal oscillator (or ceramic resonator), and the bypass capacitor to be grounded to the close position to the device.

The printed circuit board artwork is recommended to surround the X0 pin and X1 pin by ground circuits.

Mode pins (MD2, MD1, MD0)

Connect the MD2, MD1and MD0 mode pin to the VCC pin or VSS pin directly. To prevent an erroneous selection of test mode caused by the noise, reduce the pattern length between each mode pin and VCC pin or VSS pin on the printed circuit board. Also, use the low-impedance pin connection.

During power-on

To prevent a malfunction of the voltage step-down circuit built in the device, set the voltage rising time to have 50µs or longer (between 0.2V to 2.7V) during power-on.

Notes during PLL clock operation

When the PLL clock is selected and if the oscillator is disconnected or if the input is stopped, this clock may continue to operate at the free running frequency of the self-oscillator circuit built in the PLL clock. This operation is not guaranteed.

Treatment of A/D converter power supply pins

Connect the pins to have AVcc = AVRH = Vcc5 and AVss/AVRL = Vss even if the A/D converter is not used.

Notes on using external clock

An external clock is not supported. None of the external direct clock input can be used for both main clock and sub clock.

Power-on sequence of A/D converter analog inputs

Be sure to turn on the digital power supply voltage (Vcc) first, and then turn on the A/D converter power supply voltage (AVcc, AVRH, AVRL) and analog input voltage (AN0 to AN39). Also, turn off the A/D converter power supplies and analog inputs first, and then turn off the digital power supply voltage (Vcc5). When the AVRH pin voltage is turned on or off, it must not exceed AVcc. Even if a common analog input pin is used as an input port, its input voltage must not exceed AVcc. (However, the analog power supply voltage and digital power supply voltage can be turned on or off simultaneously.)

Treatment of power supplies for high current output buffer pins (DVcc, DVss)

Be sure to turn on the digital power supply voltage (Vcc) first, and then turn on the power supply voltage for high current output buffer pins (DVcc, DVss). Also, turn off the power supplies for high current output buffer pins first, and then turn off the digital power supply voltage (Vcc).

Even if the high current output buffer pins are used as general-purpose ports, the power supply voltage of high current output buffer pins (DVcc, DVss) must be powered. (The power supplies of high current output buffer pins and the digital power supplies can be turned on or off simultaneously.

Treatment of C pin

This device contains a voltage step-down circuit. A capacitor must always be connected to the C pin to assure the internal stabilization of the device.

For the standard values, see the "Recommended Operating Conditions" of the latest data sheet.

Function Switching of a Multiplexed Port

To switch between the port function and the multiplexed pin function, use the PFR (port function register). However, if a pin is also used for an external bus, its function is switched by the external bus setting. For details, see "I/O Ports".

Low-power Consumption Mode

To transit to the sleep mode, watch mode, stop mode, watch mode(power-off) or stop mode(power-off), follow the procedure explained in the "Activating the sleep mode, watch mode, or stop mode" or the "Activating the watch mode (power-off) or stop mode(power-off)" of "POWER CONSUMPTION CONTROL" in Hardware Manual.

Take the following notes when using a monitor debugger.

- Do not set a break point for the low-power consumption transition program.
- Do not execute an operation step for the low-power consumption transition program.

Precautions when writing to registers including the status flag

When writing a function control data in the register that has a status flag (especially, an interrupt request flag), taking care not to clear its status flag erroneously must be followed.

The program must be written not to clear the flag to the status bit, and then to set the control bits to have the desired value.

Especially, if multiple control bits are used, the bit instruction cannot be used. (The bit instruction can access to a single bit only.) By the Byte, Half-word, or Word access, writing data in the control bits and status flag simultaneously is done. During this time, take care not to clear other bits (in this case, the bits of status flag) erroneously.

Note: These points can be ignored because the bit instructions to a register which supports RMW are already taken the points into consideration. Care must be taken when the bit instruction is used to a register which does not support RMW.

No-connected-pin

The product of LQFP-208 has some no-connected-pin which is not connected to any function on die. Pins are recommended to be pulled-up or pulled-down on the extern circuit.

9. Block Diagram

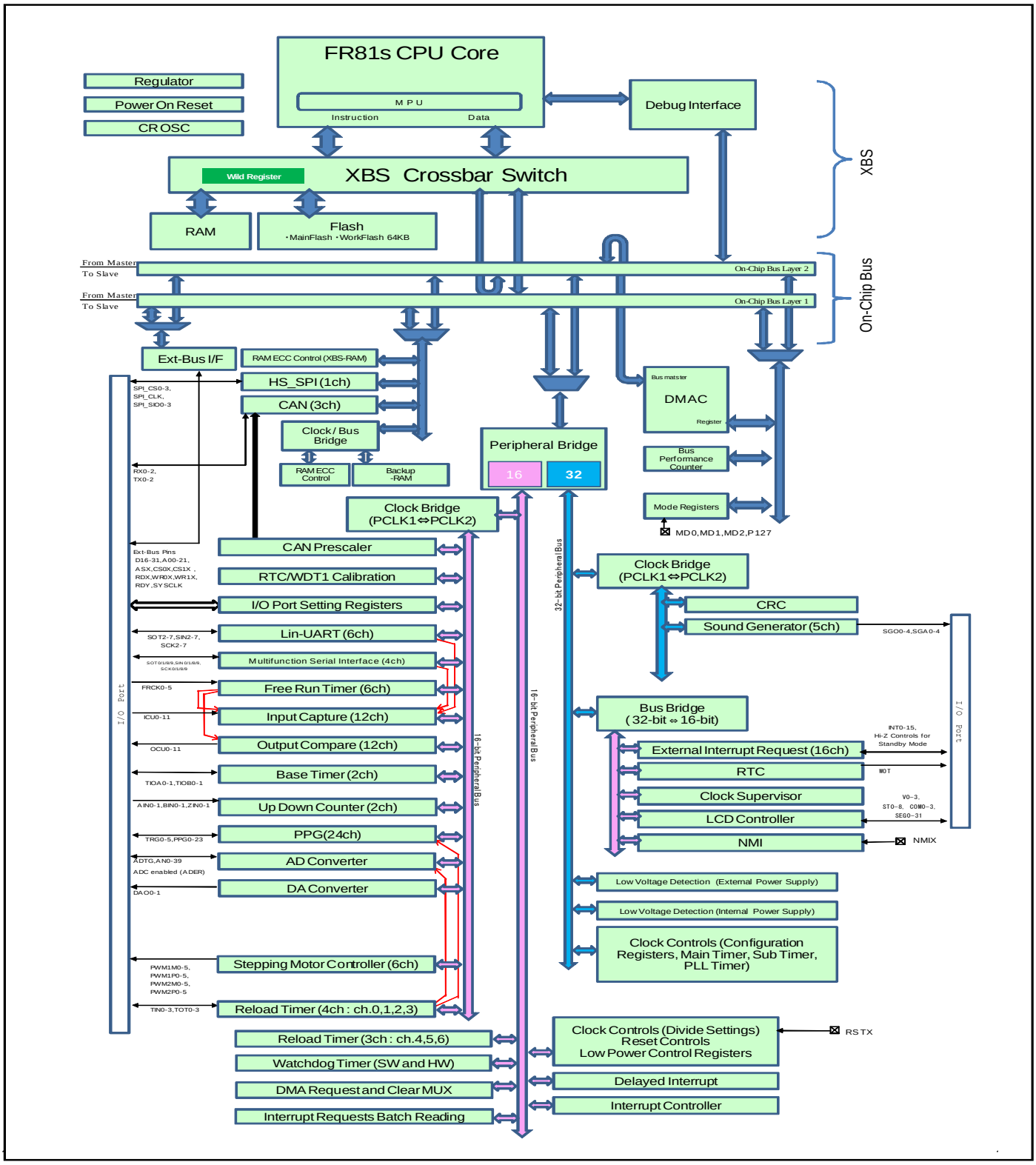

Note: In this series, the HS-SPI function is prohibited

10. Memory Map

Memory map

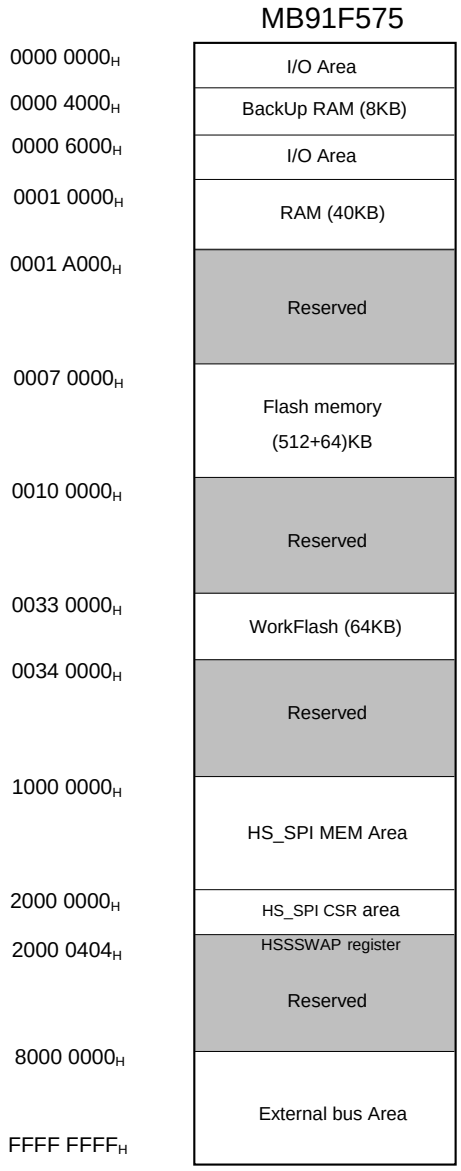

Memory map

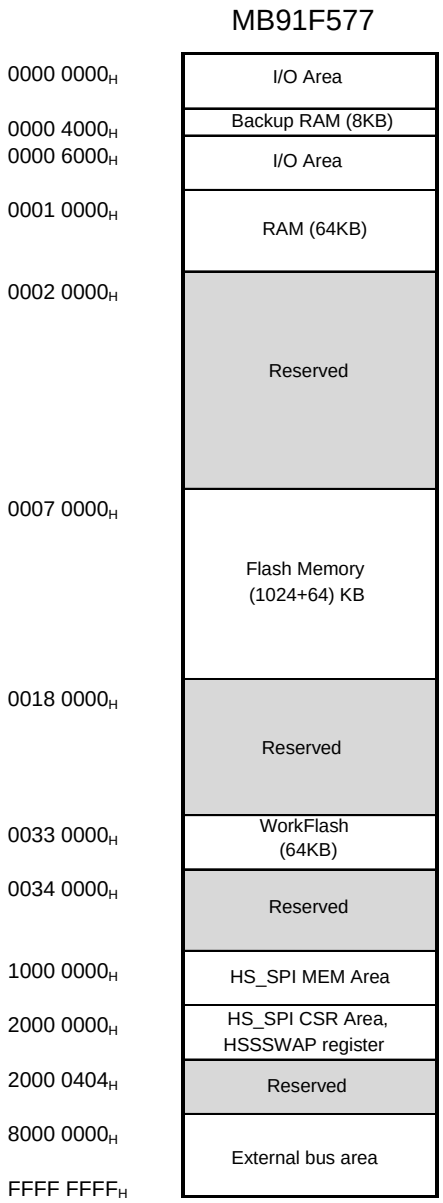
MB91F577
0000 0000H
I/O Area
0000 4000H
Backup RAM (8KB)
0000 6000H
I/O Area
0001 0000H
RAM (64KB)
0002 0000H
Reserved
0007 0000H
Flash Memory
(1024+64) KB
0018 0000H
Reserved
0033 0000H
WorkFlash
(64KB)
0034 0000H
Reserved
1000 0000H
HS_SPI MEM Area
2000 0000H
HS_SPI CSR Area,
HSSSWAP register
2000 0404H
Reserved
8000 0000H
External bus area
FFFF FFFFH

Memory map

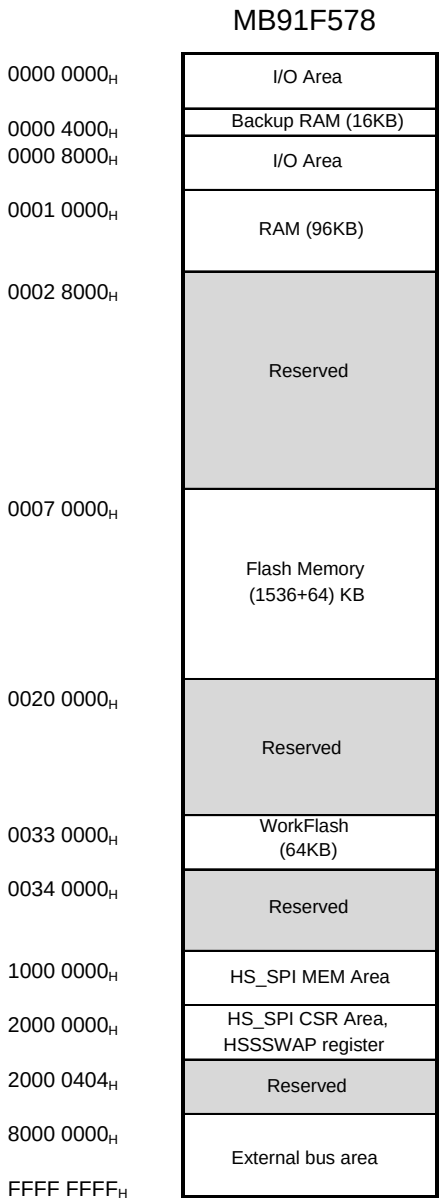
MB91F578
0000 0000H
I/O Area
0000 4000H
Backup RAM (16KB)
0000 8000H
I/O Area
0001 0000H
RAM (96KB)
0002 8000H
Reserved
0007 0000H
Flash Memory
(1536+64) KB
0020 0000H
Reserved
0033 0000H
WorkFlash
(64KB)
0034 0000H
Reserved
1000 0000H
HS_SPI MEM Area
2000 0000H
HS_SPI CSR Area,
HSSSWAP register
2000 0404H
Reserved
8000 0000H
External bus area
FFFF FFFFH

Memory map

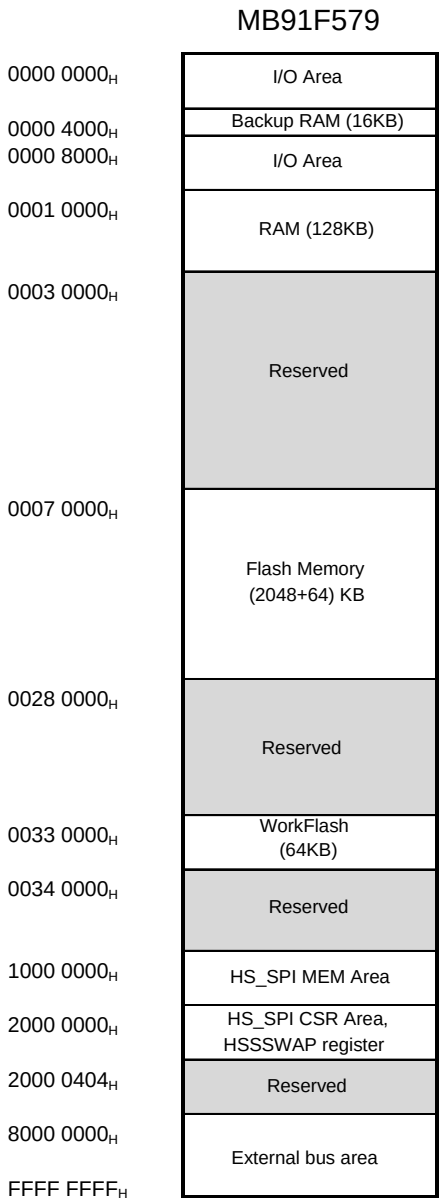
MB91F579
0000 0000H
I/O Area
0000 4000H
Backup RAM (16KB)
0000 8000H
I/O Area
0001 0000H
RAM (128KB)
0003 0000H
Reserved
0007 0000H
Flash Memory
(2048+64) KB
0028 0000H
Reserved
0033 0000H
WorkFlash
(64KB)
0034 0000H
Reserved
1000 0000H
HS_SPI MEM Area
2000 0000H
HS_SPI CSR Area,
HSSSWAP register
2000 0404H
Reserved
8000 0000H
External bus area
FFFF FFFFH

11. I/O Map

The following I/O map shows the relationship between memory space and registers for peripheral resources.

Legend of I/O Map

Read/Write attribute (R: Read W: Write)

Address	Address offset value/ register name				Block
	+0	+1	+2	+3	
000090_H	BT1TMR[R] H 0000000000000000		BT1TMCR[R/W]B,H,W 00000000 00000000		Base timer 1
000094_H	—	BT1STC[R/W] B 00000000	—	—	
000098_H	BT1PCSR/BT1PRLL[R /W] H 0000000000000000		BT1PDU T/BT1PRLH/BT1D TBF[R/W] H 0000000000000000		
$00009C_H$	BTSEL[R /W] B ----0000	—	BTSS SR[W] B,H -------- ------11		
$0000A0_H$	ADERH [R/W]B, H, W 00000000 00000000		ADER L [R/W]B, H, W 00000000 00000000		A/D converter
$0000A4_H$	ADCS1 [R/W] B, H,W 00000000	ADCS0 [R/W] B, H,W 00000000	ADCR1 [R] B, H,W ------XX	ADCR 0 [R] B, H,W XXXXX XXX	
$0000A8_H$	ADCT1 [R/W] B, H,W 00010000	ADC T0 [R/W] B, H,W 0010 1100	ADSCH [R/W] B, H,W ---00000	ADECH [R/W] B, H,W ---00000	

Data access attribute
B: Byte
H: Half-word
W: Word

(Note)
The access by the data access attribute not described is disabled.

Initial register value after reset

The initial register value after reset indicates as follows:

"1": Initial value "1"

"0": Initial value "0"

"X": Initial value undefined

"-": Reserved bit/Undefined bit

"*": Initial value "0" or "1" according to the setting

Note:

It is prohibited to access addresses not described here.

Table: I/O Map

Address	Address offset value / Register name				Block
	+0	+1	+2	+3	
000000_H	PDR00[R/W] B,H,W XXXXXXXX	PDR01[R/W] B,H,W XXXXXXXX	PDR02[R/W] B,H,W XXXXXXXX	PDR03[R/W] B,H,W XXXXXXXX	Port data register *4:MB91F578/9 only
000004_H	PDR04[R/W] B,H,W XXXXXXXX	PDR05[R/W] B,H,W XXXXXXXX	PDR06[R/W] B,H,W XXXXXXXX	PDR07[R/W] B,H,W XXXXXXXX	
000008_H	PDR08[R/W] B,H,W XXXXXXXX	PDR09[R/W] B,H,W XXXXXXXX	PDR10[R/W] B,H,W XXXXXXXX	PDR11[R/W] B,H,W XXXXXXXX	
$00000C_H$	PDR12[R/W] B,H,W XXXXXXXX	PDR13[R/W] B,H,W XX-XXXXX	PDR14[R/W] B,H,W XXXXXXXX*4	PDR15[R/W] B,H,W XXXXXXXX*4	
000010_H	PDR16[R/W] B,H,W XXXXXXXX*4	PDR17[R/W] B,H,W XXXXXXXX*4	PDR18[R/W] B,H,W XXXXXXXX*4	PDR19[R/W] B,H,W XXXXXXXX*4	
000014_H to 000038_H	—	—	—	—	Reserved
$00003C_H$	WDTCR0[R/W] B,H,W -0--0000	WDTCPR0[W] B,H,W 00000000	WDTCR1[R] B,H,W ----0110	WDTCPR1[W] B,H,W 00000000	Watchdog timer [S]
000040_H	—	—	—	—	Reserved
000044_H	DICR [R/W] B -------0	—	—	—	Delayed interrupt
000048_H	TMRLRA4 [R/W] H XXXXXXXX XXXXXXXX		TMR4 [R] H XXXXXXXX XXXXXXXX		Reload timer 4
$00004C_H$	TMRLRB4 [R/W] H XXXXXXXX XXXXXXXX		TMCSR4 [R/W] B, H,W 00000000 0-000000		
000050_H	TMRLRA5 [R/W] H XXXXXXXX XXXXXXXX		TMR5 [R] H XXXXXXXX XXXXXXXX		Reload timer 5
000054_H	TMRLRB5 [R/W] H XXXXXXXX XXXXXXXX		TMCSR5 [R/W] B, H,W 00000000 0-000000		
000058_H	TMRLRA6 [R/W] H XXXXXXXX XXXXXXXX		TMR6 [R] H XXXXXXXX XXXXXXXX		Reload timer 6
$00005C_H$	TMRLRB6 [R/W] H XXXXXXXX XXXXXXXX		TMCSR6 [R/W] B, H,W 00000000 0-000000		
000060_H	TMRLRA0 [R/W] H XXXXXXXX XXXXXXXX		TMR0 [R] H XXXXXXXX XXXXXXXX		Reload timer 0
000064_H	TMRLRB0 [R/W] H XXXXXXXX XXXXXXXX		TMCSR0 [R/W] B, H,W 00000000 0-000000		
000068_H to $00007C_H$	—	—	—	—	Reserved

Address	Address offset value / Register name				Block
	+0	+1	+2	+3	
000080_H	BT0TMR[R] H 00000000 00000000		BT0TMCR[R/W]H -0000000 00000000		Base timer 0
000084_H	—	BT0STC[R/W] B 0000-000	—	—	
000088_H	BT0PCSR/BT0PRLL[R/W] H XXXXXXXX XXXXXXXX		BT0PDUT/BT0PRLH/BT0DTBF[R/W] H XXXXXXXX XXXXXXXX		Base timer 0
$00008C_H$	—	—	—	—	Reserved
000090_H	BT1TMR[R] H 00000000 00000000		BT1TMCR[R/W]H -0000000 00000000		Base timer 1
000094_H	—	BT1STC[R/W] B 0000-000	—	—	
000098_H	BT1PCSR/BT1PRLL[R/W] H 00000000 00000000		BT1PDUT/BT1PRLH/BT1DTBF[R/W] H 00000000 00000000		
$00009C_H$	BTSEL01[R/W] B ----0000	—	BTSSSR[W] B,H -------- ------11		Base timer 0,1
$0000A0_H$	ADERH [R/W]B, H, W 00000000 00000000		ADERL [R/W]B, H, W 00000000 00000000		A/D converter
$0000A4_H$	ADCS1 [R/W] B, H,W 0000000-	ADCS0 [R/W] B, H,W 000-----	ADCR1 [R] B, H,W ------XX	ADCR0 [R] B, H,W XXXXXXXX	
$0000A8_H$	ADCT1 [R/W] B, H,W 00010000	ADCT0 [R/W] B, H,W 00101100	ADSCH [R/W] B, H,W --000000	ADECH [R/W] B, H,W --000000	
$0000AC_H$	—	EADERLL [R/W] B, H,W 00000000	EADCS [R] B, H,W --000000	—	
$0000B0_H$	SCR0/(IBCR0) [R/W] B,H,W 0--00000	SMR0 [R/W] B,H,W 000-0000	SSR0 [R/W] B,H,W 0-000011	ESCR0/(IBSR0) [R/W] B,H,W -0000000	Multi-UART0 *1: Byte access is permitted only for access to lower 8 bits *2: Reserved because I^2C mode is not set immediately after reset.
$0000B4_H$	RDR0/(TDR0)[R/W] B,H,W *1 -------0 00000000		BGR0 [R/W] H,W 00000000 00000000		
$0000B8_H$	— / (ISMK0) [R/W] B,H,W -------- *2	— / (ISBA0) [R/W] B,H,W -------- *2	—	—	
$0000BC_H$	FCR10 [R/W] B,H,W ---00100	FCR00 [R/W] B,H,W -0000000	FBYTE20 [R/W] B,H,W 00000000	FBYTE10 [R/W] B,H,W 00000000	

Address	Address offset value / Register name				Block
	+0	+1	+2	+3	
$0000C0_H$	SCR1/(IBCR1) [R/W] B,H,W 0--00000	SMR1 [R/W] B,H,W 000-0000	SSR1 [R/W] B,H,W 0-000011	ESCR1/(IBSR1) [R/W] B,H,W -0000000	Multi-UART1 *1: Byte access is permitted only for access to lower 8 bits *2: Reserved because I^2C mode is not set immediately after reset.
$0000C4_H$	RDR1/(TDR1)[R/W] B,H,W *1 -------0 00000000		BGR1 [R/W] H,W 00000000 00000000		
$0000C8_H$	— / (ISMK1) [R/W] B,H,W -------- *2	— / (ISBA1) [R/W] B,H,W -------- *2	—	—	
$0000CC_H$	FCR11 [R/W] B,H,W ---00100	FCR01 [R/W] B,H,W -0000000	FBYTE21 [R/W] B,H,W 00000000	FBYTE11 [R/W] B,H,W 00000000	
$0000D0_H$	SCR2 [R/W] B, H, W 00000000	SMR2 [R/W] B, H, W 00000000	SSR2 [R/W] B, H, W 00001000	RDR2 /TDR2 [R/W] B, H, W 00000000	LIN-UART2
$0000D4_H$	ESCR2 [R/W] B, H, W 00000X00	ECCR2 [R/W] B, H, W -0000-XX	BGR2 [R/W] B, H, W -0000000 00000000		
$0000D8_H$	SCR3 [R/W] B, H, W 00000000	SMR3 [R/W] B, H, W 00000000	SSR3 [R/W] B, H, W 00001000	RDR3 /TDR3 [R/W] B, H, W 00000000	LIN-UART3
$0000DC_H$	ESCR3 [R/W] B, H, W 00000X00	ECCR3 [R/W] B, H, W -0000-XX	BGR3 [R/W] B, H, W -0000000 00000000		
$0000E0_H$	SCR4 [R/W] B, H, W 00000000	SMR4 [R/W] B, H, W 00000000	SSR4 [R/W] B, H, W 00001000	RDR4 /TDR4 [R/W] B, H, W 00000000	LIN-UART4
$0000E4_H$	ESCR4 [R/W] B, H, W 00000X00	ECCR4 [R/W] B, H, W -0000-XX	BGR4 [R/W] B, H, W -0000000 00000000		
$0000E8_H$	SCR5 [R/W] B, H, W 00000000	SMR5 [R/W] B, H, W 00000000	SSR5 [R/W] B, H, W 00001000	RDR5 /TDR5 [R/W] B, H, W 00000000	LIN-UART5
$0000EC_H$	ESCR5 [R/W] B, H, W 00000X00	ECCR5 [R/W] B, H, W -0000-XX	BGR5 [R/W] B, H, W -0000000 00000000		
$0000F0_H$	SCR6 [R/W] B, H, W 00000000	SMR6 [R/W] B, H, W 00000000	SSR6 [R/W] B, H, W 00001000	RDR6 /TDR6 [R/W] B, H, W 00000000	LIN-UART6
$0000F4_H$	ESCR6 [R/W] B, H, W 00000X00	ECCR6 [R/W] B, H, W -0000-XX	BGR6 [R/W] B, H, W -0000000 00000000		

Address	Address offset value / Register name				Block
	+0	+1	+2	+3	
$0000F8_H$	SCR7 [R/W] B, H, W 00000000	SMR7 [R/W] B, H, W 00000000	SSR7 [R/W] B, H, W 00001000	RDR7 /TDR7 [R/W] B, H, W 00000000	LIN-UART7
$0000FC_H$	ESCR7 [R/W] B, H, W 00000X00	ECCR7 [R/W] B, H, W -0000-XX	BGR7 [R/W] B, H, W -0000000 00000000		
000100_H	TMRLRA1 [R/W] H XXXXXXXX XXXXXXXX		TMR1 [R] H XXXXXXXX XXXXXXXX		Reload timer 1
000104_H	TMRLRB1 [R/W] H XXXXXXXX XXXXXXXX		TMCSR1 [R/W] B, H,W 00000000 0-000000		
000108_H	TMRLRA2 [R/W] H XXXXXXXX XXXXXXXX		TMR2 [R] H XXXXXXXX XXXXXXXX		Reload timer 2
$00010C_H$	TMRLRB2 [R/W] H XXXXXXXX XXXXXXXX		TMCSR2 [R/W] B, H,W 00000000 0-000000		
000110_H	TMRLRA3 [R/W] H XXXXXXXX XXXXXXXX		TMR3 [R] H XXXXXXXX XXXXXXXX		Reload timer 3
000114_H	TMRLRB3 [R/W] H XXXXXXXX XXXXXXXX		TMCSR3 [R/W] B, H,W 00000000 0-000000		
000118_H to $00011C_H$	—	—	—	—	Reserved
000120_H	OCCP6 [R/W] W 00000000 00000000 00000000 00000000				Output compare 6,7
000124_H	OCCP7 [R/W] W 00000000 00000000 00000000 00000000				
000128_H	OCFS67 [R/W] B, H, W ------11	—	OCSH67[R/W] B, H, W ---0--00	OCSL67[R/W] B, H, W 0000--00	
$00012C_H$	OCCP8 [R/W] W 00000000 00000000 00000000 00000000				Output compare 8,9
000130_H	OCCP9 [R/W] W 00000000 00000000 00000000 00000000				
000134_H	OCFS89 [R/W] B, H, W ------11	—	OCSH89[R/W] B, H, W ---0--00	OCSL89[R/W] B, H, W 0000--00	
000138_H	OCCP10 [R/W] W 00000000 00000000 00000000 00000000				Output compare 10,11
$00013C_H$	OCCP11 [R/W] W 00000000 00000000 00000000 00000000				
000140_H	OCFS1011 [R/W] B, H, W ------11	—	OCSH1011[R/W] B, H, W ---0--00	OCSL1011[R/W] B, H, W 0000--00	

Address	Address offset value / Register name				Block
	+0	+1	+2	+3	
000144_H	GCN13 [R/W] H 00110010 00010000		—	GCN23 [R/W] B ----0000	PPG12, 13, 14, 15 control
000148_H	GCN14 [R/W] H 00110010 00010000		—	GCN24 [R/W] B ----0000	PPG16, 17, 18, 19 control
$00014C_H$	GCN15 [R/W] H 00110010 00010000		—	GCN25 [R/W] B ----0000	PPG20, 21, 22, 23 control
000150_H	PTMR11 [R] H,W 11111111 11111111		PCSR11 [W] H,W XXXXXXXX XXXXXXXX		PPG11
000154_H	PDUT11 [W] H,W XXXXXXXX XXXXXXXX		PCN11 [R/W] B,H,W 0000000- 000000-0		
000158_H	PTMR12 [R] H,W 11111111 11111111		PCSR12 [W] H,W XXXXXXXX XXXXXXXX		PPG12
$00015C_H$	PDUT12 [W] H,W XXXXXXXX XXXXXXXX		PCN12 [R/W] B,H,W 0000000- 000000-0		
000160_H	PTMR13 [R] H,W 11111111 11111111		PCSR13 [W] H,W XXXXXXXX XXXXXXXX		PPG13
000164_H	PDUT13 [W] H,W XXXXXXXX XXXXXXXX		PCN13 [R/W] B,H,W 0000000- 000000-0		
000168_H	PTMR14 [R] H,W 11111111 11111111		PCSR14 [W] H,W XXXXXXXX XXXXXXXX		PPG14
$00016C_H$	PDUT14 [W] H,W XXXXXXXX XXXXXXXX		PCN14 [R/W] B,H,W 0000000- 000000-0		
000170_H	PTMR15 [R] H,W 11111111 11111111		PCSR15 [W] H,W XXXXXXXX XXXXXXXX		PPG15
000174_H	PDUT15 [W] H,W XXXXXXXX XXXXXXXX		PCN15 [R/W] B,H,W 0000000- 000000-0		
000178_H	PTMR16 [R] H,W 11111111 11111111		PCSR16 [W] H,W XXXXXXXX XXXXXXXX		PPG16
$00017C_H$	PDUT16 [W] H,W XXXXXXXX XXXXXXXX		PCN16 [R/W] B,H,W 0000000- 000000-0		
000180_H	PTMR17 [R] H,W 11111111 11111111		PCSR17 [W] H,W XXXXXXXX XXXXXXXX		PPG17
000184_H	PDUT17 [W] H,W XXXXXXXX XXXXXXXX		PCN17 [R/W] B,H,W 0000000- 000000-0		
000188_H	PTMR18 [R] H,W 11111111 11111111		PCSR18 [W] H,W XXXXXXXX XXXXXXXX		PPG18
$00018C_H$	PDUT18 [W] H,W XXXXXXXX XXXXXXXX		PCN18 [R/W] B,H,W 0000000- 000000-0		
000190_H	PTMR19 [R] H,W 11111111 11111111		PCSR19 [W] H,W XXXXXXXX XXXXXXXX		PPG19
000194_H	PDUT19 [W] H,W XXXXXXXX XXXXXXXX		PCN19 [R/W] B,H,W 0000000- 000000-0		
000198_H	PTMR20 [R] H,W 11111111 11111111		PCSR20 [W] H,W XXXXXXXX XXXXXXXX		PPG20
$00019C_H$	PDUT20 [W] H,W XXXXXXXX XXXXXXXX		PCN20 [R/W] B,H,W 0000000- 000000-0		

Address	Address offset value / Register name				Block
	+0	+1	+2	+3	
$0001A0_H$	PTMR21 [R] H,W 11111111 11111111		PCSR21 [W] H,W XXXXXXXX XXXXXXXX		PPG21
$0001A4_H$	PDUT21 [W] H,W XXXXXXXX XXXXXXXX		PCN21 [R/W] B,H,W 0000000- 000000-0		
$0001A8_H$	PTMR22 [R] H,W 11111111 11111111		PCSR22 [W] H,W XXXXXXXX XXXXXXXX		PPG22
$0001AC_H$	PDUT22 [W] H,W XXXXXXXX XXXXXXXX		PCN22 [R/W] B,H,W 0000000- 000000-0		
$0001B0_H$	PTMR23 [R] H,W 11111111 11111111		PCSR23 [W] H,W XXXXXXXX XXXXXXXX		PPG23
$0001B4_H$	PDUT23 [W] H,W XXXXXXXX XXXXXXXX		PCN23 [R/W] B,H,W 0000000- 000000-0		
$0001B8_H$ to $0001FC_H$	—	—	—	—	Reserved
000200_H	PWC20 [R/W] H,W ------XX XXXXXXXX		PWC10 [R/W] H,W ------XX XXXXXXXX		Stepping motor controller 0
000204_H	—	PWC0 [R/W] B -00000--	PWS20 [R/W] B,H,W -0000000	PWS10 [R/W] B,H,W --000000	
000208_H	PWC21 [R/W] H,W ------XX XXXXXXXX		PWC11 [R/W] H,W ------XX XXXXXXXX		Stepping motor controller 1
$00020C_H$	—	PWC1 [R/W] B -00000--	PWS21 [R/W] B,H,W -0000000	PWS11 [R/W] B,H,W --000000	
000210_H	PWC22 [R/W] H,W ------XX XXXXXXXX		PWC12 [R/W] H,W ------XX XXXXXXXX		Stepping motor controller 2
000214_H	—	PWC2 [R/W] B -00000--	PWS22 [R/W] B,H,W -0000000	PWS12 [R/W] B,H,W --000000	
000218_H	PWC23 [R/W] H,W ------XX XXXXXXXX		PWC13 [R/W] H,W ------XX XXXXXXXX		Stepping motor controller3
$00021C_H$	—	PWC3 [R/W] B -00000--	PWS23 [R/W] B,H,W -0000000	PWS13 [R/W] B,H,W --000000	
000220_H	PWC24 [R/W] H,W ------XX XXXXXXXX		PWC14 [R/W] H,W ------XX XXXXXXXX		Stepping motor controller 4
000224_H	—	PWC4 [R/W] B -00000--	PWS24 [R/W] B,H,W -0000000	PWS14 [R/W] B,H,W --000000	
000228_H	PWC25 [R/W] H,W ------XX XXXXXXXX		PWC15 [R/W] H,W ------XX XXXXXXXX		Stepping motor controller 5
$00022C_H$	—	PWC5 [R/W] B -00000--	PWS25 [R/W] B,H,W -0000000	PWS15 [R/W] B,H,W --000000	
000230_H to 000238_H	—	—	—	—	Reserved

Address	Address offset value / Register name				Block
	+0	+1	+2	+3	
$00023C_H$	DACR0 [R/W] B,H,W -------0	DADR0 [R/W] B,H,W XXXXXXXX	DACR1 [R/W] B,H,W -------0	DADR1 [R/W] B,H,W XXXXXXXX	DA converter
000240_H	CPCLR0 [R/W] W 11111111 11111111 11111111 11111111				Free-run timer 0
000244_H	TCDT0 [R/W] W 00000000 00000000 00000000 00000000				
000248_H	TCCSH0 [R/W]B,H,W 0-----00	TCCSL0 [R/W]B,H,W -1-00000	—		
$00024C_H$	CPCLR1 [R/W] W 11111111 11111111 11111111 11111111				Free-run timer 1
000250_H	TCDT1 [R/W] W 00000000 00000000 00000000 00000000				
000254_H	TCCSH1 [R/W]B,H,W 0-----00	TCCSL1 [R/W]B,H,W -1-00000	—		
000258_H	—	—	—	—	Reserved
$00025C_H$	GCN10 [R/W] H 00110010 00010000		—	GCN20 [R/W] B ----0000	PPG0, 1, 2, 3 control
000260_H	GCN11 [R/W] H 00110010 00010000		—	GCN21 [R/W] B ----0000	PPG4, 5, 6, 7 control
000264_H	GCN12 [R/W] H 00110010 00010000		—	GCN22 [R/W] B ----0000	PPG8, 9, 10, 11 control
000268_H	—	—	—	PPGDIV [R/W] B ------00	PPG0
$00026C_H$	PTMR0 [R] H,W 11111111 11111111		PCSR0 [W] H,W XXXXXXXX XXXXXXXX		
000270_H	PDUT0 [W] H,W XXXXXXXX XXXXXXXX		PCN0 [R/W] B, H,W 0000000- 000000-0		
000274_H	PTMR1 [R] H,W 11111111 11111111		PCSR1 [W] H,W XXXXXXXX XXXXXXXX		PPG1
000278_H	PDUT1 [W] H,W XXXXXXXX XXXXXXXX		PCN1 [R/W] B,H,W 0000000- 000000-0		
$00027C_H$	PTMR2 [R] H,W 11111111 11111111		PCSR2 [W] H,W XXXXXXXX XXXXXXXX		PPG2
000280_H	PDUT2 [W] H,W XXXXXXXX XXXXXXXX		PCN2 [R/W] B,H,W 0000000- 000000-0		
000284_H	PTMR3 [R] H,W 11111111 11111111		PCSR3 [W] H,W XXXXXXXX XXXXXXXX		PPG3
000288_H	PDUT3 [W] H,W XXXXXXXX XXXXXXXX		PCN3 [R/W] B,H,W 0000000- 000000-0		

Address	Address offset value / Register name				Block
	+0	+1	+2	+3	
$00028C_H$	PTMR4 [R] H,W 11111111 11111111		PCSR4 [W] H,W XXXXXXXX XXXXXXXX		PPG4
000290_H	PDUT4 [W] H,W XXXXXXXX XXXXXXXX		PCN4 [R/W] B,H,W 0000000- 000000-0		
000294_H	PTMR5 [R] H,W 11111111 11111111		PCSR5 [W] H,W XXXXXXXX XXXXXXXX		PPG5
000298_H	PDUT5 [W] H,W XXXXXXXX XXXXXXXX		PCN5 [R/W] B,H,W 0000000- 000000-0		
$00029C_H$	PTMR6 [R] H,W 11111111 11111111		PCSR6 [W] H,W XXXXXXXX XXXXXXXX		PPG6
$0002A0_H$	PDUT6 [W] H,W XXXXXXXX XXXXXXXX		PCN6 [R/W] B,H,W 0000000- 000000-0		
$0002A4_H$	PTMR7 [R] H,W 11111111 11111111		PCSR7 [W] H,W XXXXXXXX XXXXXXXX		PPG7
$0002A8_H$	PDUT7 [W] H,W XXXXXXXX XXXXXXXX		PCN7 [R/W] B,H,W 0000000- 000000-0		
$0002AC_H$	PTMR8 [R] H,W 11111111 11111111		PCSR8 [W] H,W XXXXXXXX XXXXXXXX		PPG8
$0002B0_H$	PDUT8 [W] H,W XXXXXXXX XXXXXXXX		PCN8 [R/W] B,H,W 0000000- 000000-0		
$0002B4_H$	PTMR9 [R] H,W 11111111 11111111		PCSR9 [W] H,W XXXXXXXX XXXXXXXX		PPG9
$0002B8_H$	PDUT9 [W] H,W XXXXXXXX XXXXXXXX		PCN9 [R/W] B,H,W 0000000- 000000-0		
$0002BC_H$	PTMR10 [R] H,W 11111111 11111111		PCSR10 [W] H,W XXXXXXXX XXXXXXXX		PPG10
$0002C0_H$	PDUT10 [W] H,W XXXXXXXX XXXXXXXX		PCN10 [R/W] B,H,W 0000000- 000000-0		
$0002C4_H$	IPCP0 [R] W XXXXXXXX XXXXXXXX XXXXXXXX XXXXXXXX				Input capture 0,1
$0002C8_H$	IPCP1 [R] W XXXXXXXX XXXXXXXX XXXXXXXX XXXXXXXX				
$0002CC_H$	ICFS01 [R/W] B, H, W ------00	—	LSYNS0 [R/W] B,H,W --000000	ICS01 [R/W] B, H, W 00000000	
$0002D0_H$	IPCP2 [R] W XXXXXXXX XXXXXXXX XXXXXXXX XXXXXXXX				Input capture 2,3
$0002D4_H$	IPCP3 [R] W XXXXXXXX XXXXXXXX XXXXXXXX XXXXXXXX				
$0002D8_H$	ICFS23 [R/W] B, H, W ------00	—	—	ICS23 [R/W] B, H, W 00000000	

Address	Address offset value / Register name				Block
	+0	+1	+2	+3	
$0002DC_H$	IPCP4 [R] W XXXXXXXX XXXXXXXX XXXXXXXX XXXXXXXX				Input capture 4,5
$0002E0_H$	IPCP5 [R] W XXXXXXXX XXXXXXXX XXXXXXXX XXXXXXXX				
$0002E4_H$	ICFS45 [R/W] B, H, W ------00	—	—	ICS45 [R/W] B, H, W 00000000	
$0002E8_H$	OCCP0 [R/W] W 00000000 00000000 00000000 00000000				Output compare 0,1
$0002EC_H$	OCCP1 [R/W] W 00000000 00000000 00000000 00000000				
$0002F0_H$	OCFS01 [R/W] B, H, W ------11	—	OCSH01[R/W] B, H, W ---0--00	OCSL01[R/W] B, H, W 0000--00	
$0002F4_H$	OCCP2 [R/W] W 00000000 00000000 00000000 00000000				Output compare 2,3
$0002F8_H$	OCCP3 [R/W] W 00000000 00000000 00000000 00000000				
$0002FC_H$	OCFS23 [R/W] B, H, W ------11	—	OCSH23[R/W] B, H, W ---0--00	OCSL23[R/W] B, H, W 0000--00	
000300_H to $00030C_H$	—	—	—	—	Reserved

Address	Address offset value / Register name				Block
	+0	+1	+2	+3	
000310_H	—	—	MPUCR [R/W] H 000000-0 ----0100		MPU [S] (Only the CPU can access this area)
000314_H	—	—	—	—	
000318_H	—				
$00031C_H$	—	—	—		
000320_H	DPVAR [R] W XXXXXXXX XXXXXXXX XXXXXXXX XXXXXXXX				
000324_H	—	—	DPVSR [R/W] H -------- 00000--0		
000328_H	DEAR [R] W XXXXXXXX XXXXXXXX XXXXXXXX XXXXXXXX				
$00032C_H$	—	—	DESR [R/W] H -------- 00000--0		
000330_H	PABR0 [R/W] W XXXXXXXX XXXXXXXX XXXXXXXX XXXX0000				
000334_H	—	—	PACR0 [R/W] H 000000-0 00000--0		
000338_H	PABR1 [R/W] W XXXXXXXX XXXXXXXX XXXXXXXX XXXX0000				
$00033C_H$	—	—	PACR1 [R/W] H 000000-0 00000--0		
000340_H	PABR2 [R/W] W XXXXXXXX XXXXXXXX XXXXXXXX XXXX0000				
000344_H	—	—	PACR2 [R/W] H 000000-0 00000--0		
000348_H	PABR3 [R/W] W XXXXXXXX XXXXXXXX XXXXXXXX XXXX0000				
$00034C_H$	—	—	PACR3 [R/W] H 000000-0 00000--0		

Address	Address offset value / Register name				Block
	+0	+1	+2	+3	
000350_H	PABR4 [R/W] W XXXXXXXX XXXXXXXX XXXXXXXX XXXX0000				MPU [S] (Only the CPU can access this area)
000354_H	—	—	PACR4 [R/W] H 000000-0 00000--0		
000358_H	PABR5 [R/W] W XXXXXXXX XXXXXXXX XXXXXXXX XXXX0000				
$00035C_H$	—	—	PACR5 [R/W] H 000000-0 00000--0		
000360_H	PABR6 [R/W] W XXXXXXXX XXXXXXXX XXXXXXXX XXXX0000				
000364_H	—	—	PACR6 [R/W] H 000000-0 00000--0		
000368_H	PABR7 [R/W] W XXXXXXXX XXXXXXXX XXXXXXXX XXXX0000				
$00036C_H$	—	—	PACR7 [R/W] H 000000-0 00000--0		
000370_H	PABR8 [R/W] W XXXXXXXX XXXXXXXX XXXXXXXX XXXX0000				MPU [S] (Only product supporting MPU 12 channels or 16 channels) (Only the CPU can access this area)
000374_H	—	—	PACR8 [R/W] H 000000-0 00000--0		
000378_H	PABR9[R/W] W XXXXXXXX XXXXXXXX XXXXXXXX XXXX0000				
$00037C_H$	—	—	PACR9 [R/W] H 000000-0 00000--0		
000380_H	PABR10 [R/W] W XXXXXXXX XXXXXXXX XXXXXXXX XXXX0000				
000384_H	—	—	PACR10 [R/W] H 000000-0 00000--0		
000388_H	PABR11 [R/W] ,W XXXXXXXX XXXXXXXX XXXXXXXX XXXX0000				
$00038C_H$	—	—	PACR11 [R/W] H 000000-0 00000--0		
000390_H	PABR12 [R/W] W XXXXXXXX XXXXXXXX XXXXXXXX XXXX0000				
000394_H	—	—	PACR12 [R/W] H 000000-0 00000--0		
000398_H	PABR13 [R/W] W XXXXXXXX XXXXXXXX XXXXXXXX XXXX0000				
$00039C_H$	—	—	PACR13 [R/W] H 000000-0 00000--0		

Address	Address offset value / Register name				Block
	+0	+1	+2	+3	
$0003A0_H$	PABR14 [R/W]W XXXXXXXX XXXXXXXX XXXXXXXX XXXX0000				MPU [S] (Only product supporting MPU 16 channels) (Only the CPU can access this area)
$0003A4_H$	—	—	PACR14 [R/W] H 000000-0 00000--0		
$0003A8_H$	PABR15 [R/W] W XXXXXXXX XXXXXXXX XXXXXXXX XXXX0000				
$0003AC_H$	—	—	PACR15 [R/W] H 000000-0 00000--0		
$0003B0_H$ to $0003FC_H$	—	—	—	—	Reserved [S]
000400_H	ICSEL0[R/W] B, H, W -----000	ICSEL1[R/W] B, H, W -----000	ICSEL2[R/W] B, H, W -------0	ICSEL3[R/W] B, H, W -------0	Generation and clear of DMA transfer request
000404_H	ICSEL4[R/W] B, H, W -------0	ICSEL5[R/W] B, H, W -------0	ICSEL6[R/W] B, H, W -----000	ICSEL7[R/W] B, H, W -----000	
000408_H	ICSEL8[R/W] B, H, W ------00	ICSEL9[R/W] B, H, W ------00	ICSEL10 [R/W]B, H, W ------00	ICSEL11[R/W] B, H, W ------00	
$00040C_H$	ICSEL12[R/W] B, H, W ------00	ICSEL13[R/W] B, H, W -------0	ICSEL14 [R/W]B, H, W -------0	ICSEL15[R/W] B, H, W -------0	
000410_H	ICSEL16[R/W] B, H, W -------0	ICSEL17[R/W] B, H, W -------0	ICSEL18 [R/W]B, H, W -------0	ICSEL19[R/W] B, H, W -----000	
000414_H	ICSEL20[R/W] B, H, W -----000	ICSEL21[R/W] B, H, W ------00	ICSEL22 [R/W]B, H, W ------00	—	

Address	Address offset value / Register name				Block
	+0	+1	+2	+3	
000418_H	IRPR0H[R] B, H, W 00------	IRPR0L[R] B, H, W 00------	IRPR1H[R] B, H, W 00------	IRPR1L[R] B, H, W 00------	Interrupt request batch read register
$00041C_H$	IRPR2H[R] B, H, W 00------	IRPR2L[R] B, H, W 00------	IRPR3H[R] B, H, W 000000--	IRPR3L[R] B, H, W 000000--	
000420_H	IRPR4H[R] B, H, W 0000----	IRPR4L[R] B, H, W 0000----	IRPR5H[R] B, H, W 0000----	IRPR5L[R] B, H, W 000-----	
000424_H	IRPR6H[R] B, H, W --000---	IRPR6L[R] B, H, W 00000---	IRPR7H[R] B, H, W -0000---	IRPR7L[R] B, H, W ------00	
000428_H	IRPR8H[R] B, H, W 000-----	IRPR8L[R] B, H, W 000-----	IRPR9H[R] B, H, W 00------	IRPR9L[R] B, H, W 00------	
$00042C_H$	IRPR10H[R] B, H, W 00------	IRPR10L[R] B, H, W 00------	IRPR11H[R] B, H, W 00------	IRPR11L[R] B, H, W 00------	
000430_H	IRPR12H[R] B, H, W 000000--	IRPR12L[R] B, H, W 000000--	IRPR13H[R] B, H, W 000-----	IRPR13L[R] B, H, W 00000---	
000434_H	IRPR14H[R] B, H, W 00000000	IRPR14L[R] B, H, W 00000000	IRPR15H[R] B, H, W 000-----	—	Interrupt request batch read register
000438_H to $00043C_H$	—	—	—	—	Reserved

Address	Address offset value / Register name				Block
	+0	+1	+2	+3	
000440_H	ICR00 [R/W] B, H, W ---11111	ICR01 [R/W] B, H, W ---11111	ICR02 [R/W] B, H, W ---11111	ICR03 [R/W] B, H, W ---11111	Interrupt controller [S]
000444_H	ICR04 [R/W] B, H, W ---11111	ICR05 [R/W] B, H, W ---11111	ICR06 [R/W] B, H, W ---11111	ICR07 [R/W] B, H, W ---11111	
000448_H	ICR08 [R/W] B, H, W ---11111	ICR09 [R/W] B, H, W ---11111	ICR10 [R/W] B, H, W ---11111	ICR11 [R/W] B, H, W ---11111	
$00044C_H$	ICR12 [R/W] B, H, W ---11111	ICR13 [R/W] B, H, W ---11111	ICR14 [R/W] B, H, W ---11111	ICR15 [R/W] B, H, W ---11111	
000450_H	ICR16 [R/W] B, H, W ---11111	ICR17 [R/W] B, H, W ---11111	ICR18 [R/W] B, H, W ---11111	ICR19 [R/W] B, H, W ---11111	
000454_H	ICR20 [R/W] B, H, W ---11111	ICR21 [R/W] B, H, W ---11111	ICR22 [R/W] B, H, W ---11111	ICR23 [R/W] B, H, W ---11111	
000458_H	ICR24 [R/W] B, H, W ---11111	ICR25 [R/W] B, H, W ---11111	ICR26 [R/W] B, H, W ---11111	ICR27 [R/W] B, H, W ---11111	
$00045C_H$	ICR28 [R/W] B, H, W ---11111	ICR29 [R/W] B, H, W ---11111	ICR30 [R/W] B, H, W ---11111	ICR31 [R/W] B, H, W ---11111	
000460_H	ICR32 [R/W] B, H, W ---11111	ICR33 [R/W] B, H, W ---11111	ICR34 [R/W] B, H, W ---11111	ICR35 [R/W] B, H, W ---11111	
000464_H	ICR36 [R/W] B, H, W ---11111	ICR37 [R/W] B, H, W ---11111	ICR38 [R/W] B, H, W ---11111	ICR39 [R/W] B, H, W ---11111	
000468_H	ICR40 [R/W] B, H, W ---11111	ICR41 [R/W] B, H, W ---11111	ICR42 [R/W] B, H, W ---11111	ICR43 [R/W] B, H, W ---11111	
$00046C_H$	ICR44 [R/W] B, H, W ---11111	ICR45 [R/W] B, H, W ---11111	ICR46 [R/W] B, H, W ---11111	ICR47 [R/W] B, H, W ---11111	
000470_H to $00047C_H$	—	—	—	—	Reserved [S]
000480_H	RSTRR [R] B,H,W XXXX--XX	RSTCR [R/W] B,H,W 111----0	STBCR [R/W] B,H,W * 000---11	—	Reset control [S] Power consumption control [S] *: Writing to STBCR by DMA is not permitted
000484_H	—	—	—	—	Reserved [S]

Address	Address offset value / Register name				Block
	+0	+1	+2	+3	
000488_H	DIVR0 [R/W] B,H,W 000-----	DIVR1 [R/W] B,H,W 0001----	DIVR2 [R/W] B,H,W 0011----	—	Clock control [S]
$00048C_H$	—	—	—	—	Reserved [S]
000490_H	IORR0[R/W] B, H, W -0000000	IORR1[R/W] B, H, W -0000000	IORR2[R/W] B, H, W -0000000	IORR3[R/W] B, H, W -0000000	DMA transfer request from a peripheral [S]
000494_H	IORR4[R/W] B, H, W -0000000	IORR5[R/W] B, H, W -0000000	IORR6[R/W] B, H, W -0000000	IORR7[R/W] B, H, W -0000000	
000498_H	IORR8[R/W] B, H, W -0000000	IORR9[R/W] B, H, W -0000000	IORR10[R/W] B, H, W -0000000	IORR11[R/W] B, H, W -0000000	
$00049C_H$	IORR12[R/W] B, H, W -0000000	IORR13[R/W] B, H, W -0000000	IORR14[R/W] B, H, W -0000000	IORR15[R/W] B, H, W -0000000	
$0004A0_H$	—	—	—	—	Reserved
$0004A4_H$	CANPRE [R/W] B,H,W ----0000	—	—	—	CAN prescaler
$0004A8_H$ to $0004B4_H$	—	—	—	—	Reserved
$0004B8_H$	CUCR0 [R/W] B,H,W -------- ---0--00		CUTD0 [R/W] B,H,W 10000000 00000000		RTC/WDT1 calibration (Calibration)
$0004BC_H$	CUTR0 [R] B,H,W -------- 00000000 00000000 00000000				
$0004C0_H$	—	—	—	—	
$0004C4_H$	CUCR1 [R/W] B,H,W -------- ---0--00		CUTD1[R/W] B,H,W 11000011 01010000		
$0004C8_H$	CUTR1 [R] B,H,W -------- 00000000 00000000 00000000				
$0004CC_H$	CRTR [R/W] B,H,W 01111111	—	—	—	
$0004D0_H$ to $0004DC_H$	—	—	—	—	Reserved

Address	Address offset value / Register name				Block
	+0	+1	+2	+3	
$0004E0_H$	SCR8/(IBCR8) [R/W] B,H,W 0--00000	SMR8 [R/W] B,H,W 000-0000	SSR8 [R/W] B,H,W 0-000011	ESCR8/(IBSR8) [R/W] B,H,W -0000000	Multi-UART8 *1: Byte access is permitted only for access to lower 8 bits
$0004E4_H$	RDR8/(TDR8)[R/W] B,H,W *1 -------0 00000000		BGR8 [R/W] H,W 00000000 00000000		
$0004E8_H$	—	—	—	—	
$0004EC_H$	FCR18 [R/W] B,H,W ---00100	FCR08 [R/W] B,H,W -0000000	FBYTE28 [R/W] B,H,W 00000000	FBYTE18 [R/W] B,H,W 00000000	
$0004F0_H$	SCR9/(IBCR9) [R/W] B,H,W 0--00000	SMR9 [R/W] B,H,W 000-0000	SSR9 [R/W] B,H,W 0-000011	ESCR9/(IBSR9) [R/W] B,H,W -0000000	Multi-UART9 *1: Byte access is permitted only for access to lower 8 bits
$0004F4_H$	RDR9/(TDR9)[R/W] B,H,W *1 -------0 00000000		BGR9 [R/W] H,W 00000000 00000000		
$0004F8_H$	—	—	—	—	
$0004FC_H$	FCR19 [R/W] B,H,W ---00100	FCR09 [R/W] B,H,W -0000000	FBYTE29 [R/W] B,H,W 00000000	FBYTE19 [R/W] B,H,W 00000000	
000500_H to $00050C_H$	—	—	—	—	Reserved
000510_H	CSELR [R/W] B,H,W 001---00	CMONR [R] B,H,W 001---00	MTMCR [R/W] B,H,W 00001111	STMCR [R/W] B,H,W 0000-111	Clock control [S]
000514_H	PLLCR [R/W] B,H,W -------- 11110000		CSTBR [R/W] B,H,W -0000000	PTMCR [R/W] B,H,W 00------	
000518_H	—	—	CPUAR [R/W] B,H,W 0----XXX	—	Reset [S]
$00051C_H$	—	—	—	—	Reserved [S]
000520_H	CCPSSELR [R/W] B,H,W -------0	—	—	CCPSDIVR [R/W] B,H,W -000-000	Clock control 2
000524_H	—	CCPLLFBR [R/W] B,H,W -0000000	CCSSFBR0 [R/W] B,H,W --000000	CCSSFBR1 [R/W] B,H,W ---00000	
000528_H	—	CCSSCCR0 [R/W] B,H,W ----0000	CCSSCCR1[R/W]H,W 000----- --------		
$00052C_H$	—	CCCGRCR0 [R/W] B,H,W 00----00	CCCGRCR1 [R/W] B,H,W 00000000	CCCGRCR2 [R/W] B,H,W 00000000	

Address	Address offset value / Register name				Block
	+0	+1	+2	+3	
000530_H	CCRTSELR [R/W] B,H,W 0------0	—	CCPMUCR0 [R/W] B,H,W 0-----00	CCPMUCR1 [R/W] B,H,W 0--00000	Clock control 2
000534_H	—	—	—	—	
000538_H	—	—	—	—	
$00053C_H$	—	—	—	—	
000540_H to $00054C_H$	—	—	—	—	Reserved
000550_H	EIRR0[R/W] B,H,W XXXXXXXX	ENIR0[R/W] B,H,W 00000000	ELVR0[R/W] B,H,W 00000000 00000000		External interrupt (INT0 to INT7)
000554_H	EIRR1[R/W] B,H,W XXXXXXXX	ENIR1[R/W] B,H,W 00000000	ELVR1[R/W] B,H,W 00000000 00000000		External interrupt (INT8 to INT15)
000558_H	—	—	—	—	Reserved
$00055C_H$	—	—	WTDR[R/W] H 00000000 00000000		Real-time clock
000560_H	—	WTCRH [R/W] B ------00	WTCRM [R/W] B,H 00000000	WTCRL [R/W] B,H ----00-0	
000564_H	—	WTBRH [R/W] B --XXXXXX	WTBRM [R/W] B XXXXXXXX	WTBRL [R/W] B XXXXXXXX	
000568_H	WTHR [R/W] B,H ---00000	WTMR [R/W] B,H --000000	WTSR [R/W] B --000000	—	
$00056C_H$	—	CSVCR[R/W]B -001110- -001010-*[3]	—	—	Clock supervisor
000570_H to $00057C_H$	—	—	—	—	Reserved
000580_H	REGSEL [R/W] B,H,W 0110011-	—	—	—	Regulator control
000584_H	LVD5R [R/W] B,H,W -------1	LVD5F [R/W] B,H,W 0-100--1	LVD [R/W] B,H,W 01000--0	—	Low-voltage detection
000588_H to $00058C_H$	—	—	—	—	Reserved

Address	Address offset value / Register name				Block
	+0	+1	+2	+3	
000590_H	PMUSTR [R/W] B,H,W 0-----1X	PMUCTLR [R/W] B,H,W 0-00----	PWRTMCTL [R/W] B,H,W -----011	—	PMU
000594_H	PMUINTF0 [R/W] B,H,W 00000000	PMUINTF1 [R/W] B,H,W 00000000	PMUINTF2 [R/W] B,H,W 0000----	—	
000598_H	—	—	—	—	
$00059C_H$ to $0005A4_H$	—	—	—	—	Reserved
$0005A8_H$	LCDCMR [R/W] B,H,W 0-------	LCRS [R/W] B,H,W 00000000	LCR0 [R/W] B,H,W 00010000	LCR1 [R/W] B,H,W --------	LCD controller
$0005AC_H$	VRAM0[R/W] B,H,W 00000000	VRAM1[R/W] B,H,W 00000000	VRAM2[R/W] B,H,W 00000000	VRAM3[R/W] B,H,W 00000000	
$0005B0_H$	VRAM4[R/W] B,H,W 00000000	VRAM5[R/W] B,H,W 00000000	VRAM6[R/W] B,H,W 00000000	VRAM7[R/W] B,H,W 00000000	
$0005B4_H$	VRAM8[R/W] B,H,W 00000000	VRAM9[R/W] B,H,W 00000000	VRAM10[R/W] B,H,W 00000000	VRAM11[R/W] B,H,W 00000000	
$0005B8_H$	VRAM12[R/W] B,H,W 00000000	VRAM13[R/W] B,H,W 00000000	VRAM14[R/W] B,H,W 00000000	VRAM15[R/W] B,H,W 00000000	
$0005BC_H$	LDR0[R/W] B,H,W -------0	LDR1[R/W] B,H,W 00000000	—	—	
$0005C0_H$ to $0005FC_H$	—	—	—	—	Reserved
000600_H	ASR0 [R/W] W 00000000 00000000 -------- 1111-001				External bus Interface [S]
000604_H	ASR1 [R/W] W XXXXXXXX XXXXXXXX -------- XXXX-XX0				
000608_H	ASR2 [R/W] W XXXXXXXX XXXXXXXX -------- XXXX-XX0				
$00060C_H$	ASR3 [R/W] W XXXXXXXX XXXXXXXX -------- XXXX-XX0				
000610_H to $00063C_H$	—	—	—	—	Reserved [S]

Address	Address offset value / Register name				Block
	+0	+1	+2	+3	
000640_H	ACR0 [R/W] W -------- -------- -------- 01--00--				External bus Interface [S]
000644_H	ACR1 [R/W] W -------- -------- -------- XX--XX--				
000648_H	ACR2 [R/W] W -------- -------- -------- XX--XX--				
$00064C_H$	ACR3 [R/W] W -------- -------- -------- XX--XX--				
000650_H to $00067C_H$	—	—	—	—	Reserved [S]
000680_H	AWR0 [R/W] W ----1111 00000000 11110000 00000-0-				External bus Interface [S]
000684_H	AWR1 [R/W] W ----XXXX XXXXXXXX XXXXXXXX XXXXX-X-				
000688_H	AWR2 [R/W] W ----XXXX XXXXXXXX XXXXXXXX XXXXX-X-				
$00068C_H$	AWR3 [R/W] W ----XXXX XXXXXXXX XXXXXXXX XXXXX-X-				
000690_H to $00070C_H$	—	—	—	—	Reserved (to $0006FF_H$[S])
000710_H	BPCCRA[R/W] B 00000000	BPCCRB[R/W] B 00000000	BPCCRC[R/W] B 00000000	—	Bus performance counter
000714_H	BPCTRA [R/W] W 00000000 00000000 00000000 00000000				
000718_H	BPCTRB [R/W] W 00000000 00000000 00000000 00000000				
$00071C_H$	BPCTRC [R/W] W 00000000 00000000 00000000 00000000				
000720_H to $0007F8_H$	—	—	—	—	Reserved
$0007FC_H$	BMODR[R] B, H, W XXXXXXXX	—	—	—	Operation mode
000800_H to $00083C_H$	—	—	—	—	Reserved [S]
000840_H	FCTLR[R/W] H -0--1000 0--0----		—	FSTR[R/W] B -----001	Flash memory register [S]
000844_H	—	—	—	—	Reserved [S]
000848_H	—	—	—	—	Reserved [S]
$00084C_H$	—	—	—	—	
000850_H	—	—	—	—	
000854_H	—	—	—	—	
000858_H	—	—	WREN[R/W] H 00000000 00000000		Wild register [S]

Address	Address offset value / Register name				Block
	+0	+1	+2	+3	
$00085C_H$	—	—	—	—	Reserved [S]
000860_H	—	—	—	—	
000864_H	—	—	—	—	
000868_H	—	—	—	—	
$00086C_H$	—	—	—	—	
000870_H	—	—	—	—	
000874_H	—	—	—	—	
000878_H	—	—	—	—	
$00087C_H$	—	—	—	—	Reserved [S]
000880_H	WRAR00 [R/W] W -------- --XXXXXX XXXXXXXX XXXXXX--				Wild register [S]
000884_H	WRDR00 [R/W] W XXXXXXXX XXXXXXXX XXXXXXXX XXXXXXXX				
000888_H	WRAR01 [R/W] W -------- --XXXXXX XXXXXXXX XXXXXX--				
$00088C_H$	WRDR01 [R/W] W XXXXXXXX XXXXXXXX XXXXXXXX XXXXXXXX				
000890_H	WRAR02 [R/W] W -------- --XXXXXX XXXXXXXX XXXXXX--				
000894_H	WRDR02 [R/W] W XXXXXXXX XXXXXXXX XXXXXXXX XXXXXXXX				
000898_H	WRAR03 [R/W] W -------- --XXXXXX XXXXXXXX XXXXXX--				
$00089C_H$	WRDR03 [R/W] W XXXXXXXX XXXXXXXX XXXXXXXX XXXXXXXX				
$0008A0_H$	WRAR04 [R/W] W -------- --XXXXXX XXXXXXXX XXXXXX--				
$0008A4_H$	WRDR04 [R/W] W XXXXXXXX XXXXXXXX XXXXXXXX XXXXXXXX				
$0008A8_H$	WRAR05 [R/W] W -------- --XXXXXX XXXXXXXX XXXXXX--				
$0008AC_H$	WRDR05 [R/W] W XXXXXXXX XXXXXXXX XXXXXXXX XXXXXXXX				
$0008B0_H$	WRAR06 [R/W] W -------- --XXXXXX XXXXXXXX XXXXXX--				
$0008B4_H$	WRDR06 [R/W] W XXXXXXXX XXXXXXXX XXXXXXXX XXXXXXXX				
$0008B8_H$	WRAR07 [R/W] W -------- --XXXXXX XXXXXXXX XXXXXX--				
$0008BC_H$	WRDR07 [R/W] W XXXXXXXX XXXXXXXX XXXXXXXX XXXXXXXX				
$0008C0_H$	WRAR08 [R/W] W -------- --XXXXXX XXXXXXXX XXXXXX--				
$0008C4_H$	WRDR08 [R/W] W XXXXXXXX XXXXXXXX XXXXXXXX XXXXXXXX				

Address	Address offset value / Register name				Block
	+0	+1	+2	+3	
$0008C8_H$	WRAR09 [R/W] W -------- --XXXXXX XXXXXXXX XXXXXX--				Wild register [S]
$0008CC_H$	WRDR09 [R/W] W XXXXXXXX XXXXXXXX XXXXXXXX XXXXXXXX				
$0008D0_H$	WRAR10 [R/W] W -------- --XXXXXX XXXXXXXX XXXXXX--				
$0008D4_H$	WRDR10 [R/W] W XXXXXXXX XXXXXXXX XXXXXXXX XXXXXXXX				
$0008D8_H$	WRAR11 [R/W] W -------- --XXXXXX XXXXXXXX XXXXXX--				
$0008DC_H$	WRDR11 [R/W] W XXXXXXXX XXXXXXXX XXXXXXXX XXXXXXXX				
$0008E0_H$	WRAR12 [R/W] W -------- --XXXXXX XXXXXXXX XXXXXX--				
$0008E4_H$	WRDR12 [R/W] W XXXXXXXX XXXXXXXX XXXXXXXX XXXXXXXX				
$0008E8_H$	WRAR13 [R/W] W -------- --XXXXXX XXXXXXXX XXXXXX--				
$0008EC_H$	WRDR13 [R/W] W XXXXXXXX XXXXXXXX XXXXXXXX XXXXXXXX				
$0008F0_H$	WRAR14 [R/W] W -------- --XXXXXX XXXXXXXX XXXXXX--				
$0008F4_H$	WRDR14 [R/W] W XXXXXXXX XXXXXXXX XXXXXXXX XXXXXXXX				
$0008F8_H$	WRAR15 [R/W] W -------- --XXXXXX XXXXXXXX XXXXXX--				
$0008FC_H$	WRDR15 [R/W] W XXXXXXXX XXXXXXXX XXXXXXXX XXXXXXXX				
000900_H to $000BF8_H$	—	—	—	—	Reserved
$000BFC_H$	—	—	UER [W] B,H,W -------- -------X		OCDU
$000C00_H$	DCCR0[R/W] W 0----000 --00--00 00000000 0-000000				DMA controller [S]
$000C04_H$	DCSR0[R/W] H 0------- -----000		DTCR0[R/W] H 00000000 00000000		
$000C08_H$	DSAR0[R/W] W XXXXXXXX XXXXXXXX XXXXXXXX XXXXXXXX				
$000C0C_H$	DDAR0 [R/W] W XXXXXXXX XXXXXXXX XXXXXXXX XXXXXXXX				
$000C10_H$	DCCR1 [R/W] W 0----000 --00--00 00000000 0-000000				
$000C14_H$	DCSR1 [R/W] H 0------- -----000		DTCR1 [R/W] H 00000000 00000000		
$000C18_H$	DSAR1 [R/W] W XXXXXXXX XXXXXXXX XXXXXXXX XXXXXXXX				
$000C1C_H$	DDAR1 [R/W] W XXXXXXXX XXXXXXXX XXXXXXXX XXXXXXXX				

Address	Address offset value / Register name				Block
	+0	+1	+2	+3	
$000C20_H$	DCCR2 [R/W] W 0----000 --00--00 00000000 0-000000				DMA controller [S]
$000C24_H$	DCSR2 [R/W] H 0------- -----000		DTCR2 [R/W] H 00000000 00000000		
$000C28_H$	DSAR2 [R/W] W XXXXXXXX XXXXXXXX XXXXXXXX XXXXXXXX				
$000C2C_H$	DDAR2 [R/W] W XXXXXXXX XXXXXXXX XXXXXXXX XXXXXXXX				
$000C30_H$	DCCR3[R/W] W 0----000 --00--00 00000000 0-000000				
$000C34_H$	DCSR3 [R/W] H 0------- -----000		DTCR3 [R/W] H 00000000 00000000		
$000C38_H$	DSAR3 [R/W] W XXXXXXXX XXXXXXXX XXXXXXXX XXXXXXXX				
$000C3C_H$	DDAR3 [R/W] W XXXXXXXX XXXXXXXX XXXXXXXX XXXXXXXX				
$000C40_H$	DCCR4 [R/W] W 0----000 --00--00 00000000 0-000000				
$000C44_H$	DCSR4 [R/W] H 0------- -----000		DTCR4 [R/W] H 00000000 00000000		
$000C48_H$	DSAR4[R/W] W XXXXXXXX XXXXXXXX XXXXXXXX XXXXXXXX				
$000C4C_H$	DDAR4[R/W] W XXXXXXXX XXXXXXXX XXXXXXXX XXXXXXXX				
$000C50_H$	DCCR5 [R/W] W 0----000 --00--00 00000000 0-000000				
$000C54_H$	DCSR5 [R/W] H 0------- -----000		DTCR5 [R/W] H 00000000 00000000		
$000C58_H$	DSAR5 [R/W] W XXXXXXXX XXXXXXXX XXXXXXXX XXXXXXXX				
$000C5C_H$	DDAR5 [R/W] W XXXXXXXX XXXXXXXX XXXXXXXX XXXXXXXX				
$000C60_H$	DCCR6 [R/W] W 0----000 --00--00 00000000 0-000000				
$000C64_H$	DCSR6 [R/W] H 0------- -----000		DTCR6 [R/W] H 00000000 00000000		
$000C68_H$	DSAR6 [R/W] W XXXXXXXX XXXXXXXX XXXXXXXX XXXXXXXX				
$000C6C_H$	DDAR6 [R/W] W XXXXXXXX XXXXXXXX XXXXXXXX XXXXXXXX				

Address	Address offset value / Register name				Block
	+0	+1	+2	+3	
$000C70_H$	DCCR7 [R/W] W 0----000 --00--00 00000000 0-000000				DMA controller [S]
$000C74_H$	DCSR7 [R/W] H 0------- -----000		DTCR7 [R/W] H 00000000 00000000		
$000C78_H$	DSAR7 [R/W] W XXXXXXXX XXXXXXXX XXXXXXXX XXXXXXXX				
$000C7C_H$	DDAR7 [R/W] W XXXXXXXX XXXXXXXX XXXXXXXX XXXXXXXX				
$000C80_H$	DCCR8 [R/W] W 0----000 --00--00 00000000 0-000000				
$000C84_H$	DCSR8 [R/W] H 0------- -----000		DTCR8 [R/W] H 00000000 00000000		
$000C88_H$	DSAR8 [R/W] W XXXXXXXX XXXXXXXX XXXXXXXX XXXXXXXX				
$000C8C_H$	DDAR8 [R/W] W XXXXXXXX XXXXXXXX XXXXXXXX XXXXXXXX				
$000C90_H$	DCCR9 [R/W] W 0----000 --00--00 00000000 0-000000				
$000C94_H$	DCSR9 [R/W] H 0------- -----000		DTCR9 [R/W] H 00000000 00000000		
$000C98_H$	DSAR9 [R/W] W XXXXXXXX XXXXXXXX XXXXXXXX XXXXXXXX				
$000C9C_H$	DDAR9 [R/W] W XXXXXXXX XXXXXXXX XXXXXXXX XXXXXXXX				
$000CA0_H$	DCCR10 [R/W] W 0----000 --00--00 00000000 0-000000				
$000CA4_H$	DCSR10[R/W] H 0------- -----000		DTCR10[R/W] H 00000000 00000000		
$000CA8_H$	DSAR10 [R/W] W XXXXXXXX XXXXXXXX XXXXXXXX XXXXXXXX				
$000CAC_H$	DDAR10 [R/W] W XXXXXXXX XXXXXXXX XXXXXXXX XXXXXXXX				
$000CB0_H$	DCCR11[R/W] W 0----000 --00--00 00000000 0-000000				
$000CB4_H$	DCSR11 [R/W] H 0------- -----000		DTCR11 [R/W] H 00000000 00000000		
$000CB8_H$	DSAR11 [R/W] W XXXXXXXX XXXXXXXX XXXXXXXX XXXXXXXX				
$000CBC_H$	DDAR11 [R/W] W XXXXXXXX XXXXXXXX XXXXXXXX XXXXXXXX				

Address	Address offset value / Register name				Block
	+0	+1	+2	+3	
$000CC0_H$	DCCR12 [R/W] W 0----000 --00--00 00000000 0-000000				DMA controller [S]
$000CC4_H$	DCSR12 [R/W] H 0------- -----000		DTCR12 [R/W] H 00000000 00000000		
$000CC8_H$	DSAR12 [R/W] W XXXXXXXX XXXXXXXX XXXXXXXX XXXXXXXX				
$000CCC_H$	DDAR12 [R/W] W XXXXXXXX XXXXXXXX XXXXXXXX XXXXXXXX				
$000CD0_H$	DCCR13 [R/W] W 0----000 --00--00 00000000 0-000000				
$000CD4_H$	DCSR13[R/W] H 0------- -----000		DTCR13[R/W] H 00000000 00000000		
$000CD8_H$	DSAR13[R/W] W XXXXXXXX XXXXXXXX XXXXXXXX XXXXXXXX				
$000CDC_H$	DDAR13[R/W] W XXXXXXXX XXXXXXXX XXXXXXXX XXXXXXXX				
$000CE0_H$	DCCR14[R/W] W 0----000 --00--00 00000000 0-000000				
$000CE4_H$	DCSR14[R/W] H 0------- -----000		DTCR14[R/W] H 00000000 00000000		
$000CE8_H$	DSAR14[R/W] W XXXXXXXX XXXXXXXX XXXXXXXX XXXXXXXX				
$000CEC_H$	DDAR14[R/W] W XXXXXXXX XXXXXXXX XXXXXXXX XXXXXXXX				
$000CF0_H$	DCCR15[R/W] W 0----000 --00--00 00000000 0-000000				
$000CF4_H$	DCSR15[R/W] H 0------- -----000		DTCR15[R/W] H 00000000 00000000		
$000CF8_H$	DSAR15[R/W] W XXXXXXXX XXXXXXXX XXXXXXXX XXXXXXXX				
$000CFC_H$	DDAR15[R/W] W XXXXXXXX XXXXXXXX XXXXXXXX XXXXXXXX				
$000D00_H$ to $000DF0_H$	—	—	—	—	Reserved [S]
$000DF4_H$	—	—	DNMIR[R/W] B 0------0	DILVR[R/W] B ---11111	DMA controller [S]
$000DF8_H$	DMACR[R/W] W 0------- -------- 0------- --------				
$000DFC_H$	—	—	—	—	Reserved [S]

Address	Address offset value / Register name				Block
	+0	+1	+2	+3	
$000E00_H$	DDR00[R/W] B,H,W 00000000	DDR01[R/W] B,H,W 00000000	DDR02[R/W] B,H,W 00000000	DDR03[R/W] B,H,W 00000000	Data direction Register *4:MB91F578/9 only
$000E04_H$	DDR04[R/W] B,H,W 00000000	DDR05[R/W] B,H,W -0000000	DDR06[R/W] B,H,W 00000000	DDR07[R/W] B,H,W 00000000	
$000E08_H$	DDR08[R/W] B,H,W 00000000	DDR09[R/W] B,H,W 00000000	DDR10[R/W] B,H,W 00000000	DDR11[R/W] B,H,W 00000000	
$000E0C_H$	DDR12[R/W] B,H,W 00000000	DDR13[R/W] B,H,W 00-00000	DDR14[R/W] B,H,W 00000000*4	DDR15[R/W] B,H,W 00000000*4	
$000E10_H$	DDR16[R/W] B,H,W 00000000*4	DDR17[R/W] B,H,W 00000000*4	DDR18[R/W] B,H,W 00000000*4	DDR19[R/W] B,H,W 00000000*4	
$000E14_H$ to $000E1C_H$	—	—	—	—	Reserved
$000E20_H$	PFR00[R/W] B,H,W 00000000	PFR01[R/W] B,H,W 00000000	PFR02[R/W] B,H,W 00000000	PFR03[R/W] B,H,W 10000000	Port function register *4:MB91F578/9 only
$000E24_H$	PFR04[R/W] B,H,W 11111111	PFR05[R/W] B,H,W 11111111	PFR06[R/W] B,H,W 00000000	PFR07[R/W] B,H,W 00000000	
$000E28_H$	PFR08[R/W] B,H,W 00000000	PFR09[R/W] B,H,W 0-000000	PFR10[R/W] B,H,W 00000000	PFR11[R/W] B,H,W 00000000	
$000E2C_H$	PFR12[R/W] B,H,W 00000000	PFR13[R/W] B,H,W 00-00000	PFR14[R/W] B,H,W 00000000*4	PFR15[R/W] B,H,W 00000000*4	
$000E30_H$	PFR16[R/W] B,H,W 00000000*4	PFR17[R/W] B,H,W 00000000*4	PFR18[R/W] B,H,W 00000000*4	PFR19[R/W] B,H,W 00000000*4	
$000E34_H$ to $000E3C_H$	—	—	—	—	Reserved
$000E40_H$	PDDR00[R] B,H,W XXXXXXXX	PDDR01[R] B,H,W XXXXXXXX	PDDR02[R] B,H,W XXXXXXXX	PDDR03[R] B,H,W XXXXXXXX	Input data direct read register *4:MB91F578/9 only
$000E44_H$	PDDR04[R] B,H,W XXXXXXXX	PDDR05[R] B,H,W XXXXXXXX	PDDR06[R] B,H,W XXXXXXXX	PDDR07[R] B,H,W XXXXXXXX	
$000E48_H$	PDDR08[R] B,H,W XXXXXXXX	PDDR09[R] B,H,W XXXXXXXX	PDDR10[R] B,H,W XXXXXXXX	PDDR11[R] B,H,W XXXXXXXX	
$000E4C_H$	PDDR12[R] B,H,W XXXXXXXX	PDDR13[R] B,H,W XX-XXXXX	PDDR14[R] B,H,W XXXXXXXX*4	PDDR15[R] B,H,W XXXXXXXX*4	
$000E50_H$	PDDR16[R] B,H,W XXXXXXXX*4	PDDR17[R] B,H,W XXXXXXXX*4	PDDR18[R] B,H,W XXXXXXXX*4	PDDR19[R] B,H,W XXXXXXXX*4	
$000E54_H$ to $000E5C_H$	—	—	—	—	Reserved

Address	Address offset value / Register name				Block
	+0	+1	+2	+3	
$000E60_H$	EPFR00[R/W] B,H,W 00000000	EPFR01[R/W] B,H,W 00000000	EPFR02[R/W] B,H,W ---00000	EPFR03[R/W] B,H,W ---00000	Extended port function register
$000E64_H$	EPFR04[R/W] B,H,W ---00000	EPFR05[R/W] B,H,W ---00000	EPFR06[R/W] B,H,W ---00000	EPFR07[R/W] B,H,W ---00000	
$000E68_H$	EPFR08[R/W] B,H,W ---00000	EPFR09[R/W] B,H,W ---00000	EPFR10[R/W] B,H,W -0000000	EPFR11[R/W] B,H,W --000000	
$000E6C_H$	EPFR12[R/W] B,H,W --000000	EPFR13[R/W] B,H,W --000000	EPFR14[R/W] B,H,W --000000	EPFR15[R/W] B,H,W -0000000	
$000E70_H$	EPFR16[R/W] B,H,W 00000000	EPFR17[R/W] B,H,W 00000000	EPFR18[R/W] B,H,W 10000000	EPFR19[R/W] B,H,W 11111111	
$000E74_H$	EPFR20[R/W] B,H,W 11111111	EPFR21[R/W] B,H,W 00000000	EPFR22[R/W] B,H,W 00000000	EPFR23[R/W] B,H,W 00000000	
$000E78_H$	EPFR24[R/W] B,H,W -----000	EPFR25[R/W] B,H,W -----000	EPFR26[R/W] B,H,W ----0000	EPFR27[R/W] B,H,W ---00000	
$000E7C_H$	EPFR28[R/W] B,H,W ----0000	EPFR29[R/W] B,H,W 00000000	EPFR30[R/W] B,H,W 00000000	EPFR31[R/W] B,H,W 00000000	
$000E80_H$	EPFR32[R/W] B,H,W 00000000	EPFR33[R/W] B,H,W ---00000	EPFR34[R/W] B,H,W ---00000	EPFR35[R/W] B,H,W ---00000	
$000E84_H$	EPFR36[R/W] B,H,W ---00000	EPFR37[R/W] B,H,W 00000000	EPFR38[R/W] B,H,W ---00000	EPFR39[R/W] B,H,W 00000000	
$000E88_H$	EPFR40[R/W] B,H,W --000000	EPFR41[R/W] B,H,W -----000	EPFR42[R/W] B,H,W ------00	EPFR43[R/W] B,H,W 00000000	
$000E8C_H$	EPFR44[R/W] B,H,W 00000000	EPFR45[R/W] B,H,W 00000000	EPFR46[R/W] B,H,W --000000	EPFR47[R/W] B,H,W -------0	
$000E90_H$	—	—	—	—	
$000E94_H$	EPFR52[R/W] B,H,W -------0	EPFR53[R/W] B,H,W ---00000	EPFR54[R/W] B,H,W ----0000	—	Extended port function register
$000E98_H$ to $000E9C_H$	—	—	—	—	Reserved

Address	Address offset value / Register name				Block
	+0	+1	+2	+3	
$000EA0_H$	PPCR00[R/W] B,H,W 11111111	PPCR01[R/W] B,H,W 11111111	PPCR02[R/W] B,H,W 11111111	PPCR03[R/W] B,H,W 11111111	Port pull-up/down control register *4:MB91F578/9 only
$000EA4_H$	PPCR04[R/W] B,H,W 11111111	PPCR05[R/W] B,H,W 11111111	PPCR06[R/W] B,H,W 11111111	PPCR07[R/W] B,H,W 11111111	
$000EA8_H$	PPCR08[R/W] B,H,W 11111111	PPCR09[R/W] B,H,W 11111111	PPCR10[R/W] B,H,W 11111111	PPCR11[R/W] B,H,W 11111111	
$000EAC_H$	PPCR12[R/W] B,H,W 11111111	PPCR13[R/W] B,H,W 11-11111	PPCR14[R/W] B,H,W 11111111*4	PPCR15[R/W] B,H,W 11-11111*4	
$000EB0_H$	PPCR16[R/W] B,H,W 11111111*4	PPCR17[R/W] B,H,W 11111111*4	PPCR18[R/W] B,H,W 11111111*4	PPCR19[R/W] B,H,W 11-11111*4	
$000EBC_H$	—	—	—	—	Reserved
$000EC0_H$	PPER00[R/W] B,H,W 00000000	PPER01[R/W] B,H,W 00000000	PPER02[R/W] B,H,W 00000000	PPER03[R/W] B,H,W 00000000	Port pull-up/down enable register *4:MB91F578/9 only
$000EC4_H$	PPER04[R/W] B,H,W 00000000	PPER05[R/W] B,H,W 00000000	PPER06[R/W] B,H,W 00000000	PPER07[R/W] B,H,W 00000000	
$000EC8_H$	PPER08[R/W] B,H,W 00000000	PPER09[R/W] B,H,W 00000000	PPER10[R/W] B,H,W 00000000	PPER11[R/W] B,H,W 00000000	
$000ECC_H$	PPER12[R/W] B,H,W 00000000	PPER13[R/W] B,H,W 00-00000	PPER14[R/W] B,H,W 00000000*4	PPER15[R/W] B,H,W 00000000*4	
$000ED0_H$	PPER16[R/W] B,H,W 00000000*4	PPER17[R/W] B,H,W 00000000*4	PPER18[R/W] B,H,W 00000000*4	PPER19[R/W] B,H,W 00000000*4	
$000EDC_H$	—	—	—	—	Reserved
$000EE0_H$	PILR00[R/W] B,H,W 11111111	PILR01[R/W] B,H,W 11111111	PILR02[R/W] B,H,W 11111111	PILR03[R/W] B,H,W 11111111	Port input level selection register *4:MB91F578/9 only
$000EE4_H$	PILR04[R/W] B,H,W 11111111	PILR05[R/W] B,H,W 11111111	PILR06[R/W] B,H,W 11111111	PILR07[R/W] B,H,W 11111111	
$000EE8_H$	PILR08[R/W] B,H,W 11111111	PILR09[R/W] B,H,W 11111111	PILR10[R/W] B,H,W 11111111	PILR11[R/W] B,H,W 11111111	
$000EEC_H$	PILR12[R/W] B,H,W 11111111	PILR13[R/W] B,H,W 11-11111	PILR14[R/W] B,H,W 11111111*4	PILR15[R/W] B,H,W 11111111*4	
$000EF0_H$	PILR16[R/W] B,H,W 11111111*4	PILR17[R/W] B,H,W 11111111*4	PILR18[R/W] B,H,W 11111111*4	PILR19[R/W] B,H,W 11111111*4	
$000EFC_H$	—	—	—	—	Reserved

Address	Address offset value / Register name				Block
	+0	+1	+2	+3	
$000F00_H$	EPILR00[R/W] B,H,W 00000000	EPILR01[R/W] B,H,W 00000000	EPILR02[R/W] B,H,W 00000000	EPILR03[R/W] B,H,W 00000000	Extended Port input level selection register *4:MB91F578/9 only
$000F04_H$	EPILR04[R/W] B,H,W 00000000	EPILR05[R/W] B,H,W 00000000	EPILR06[R/W] B,H,W 00000000	EPILR07[R/W] B,H,W 00000000	
$000F08_H$	EPILR08[R/W] B,H,W 00000000	EPILR09[R/W] B,H,W 00000000	EPILR10[R/W] B,H,W 00000000	EPILR11[R/W] B,H,W 00000000	
$000F0C_H$	EPILR12[R/W] B,H,W 00000000	EPILR13[R/W] B,H,W 00-00000	EPILR14[R/W] B,H,W 00000000*4	EPILR15[R/W] B,H,W 00000000*4	
$000F10_H$	EPILR16[R/W] B,H,W 00000000*4	EPILR17[R/W] B,H,W 00000000*4	EPILR18[R/W] B,H,W 00000000*4	EPILR19[R/W] B,H,W 00000000*4	
$000F1C_H$	—	—	—	—	Reserved
$000F20_H$	PODR00[R/W] B,H,W 00000000	PODR01[R/W] B,H,W 00000000	PODR02[R/W] B,H,W 00000000	PODR03[R/W] B,H,W 00000000	Port output drive register *4:MB91F578/9 only
$000F24_H$	PODR04[R/W] B,H,W 00000000	PODR05[R/W] B,H,W 00000000	PODR06[R/W] B,H,W 00000000	PODR07[R/W] B,H,W 00000000	
$000F28_H$	PODR08[R/W] B,H,W 00000000	PODR09[R/W] B,H,W 00000000	PODR10[R/W] B,H,W 00000000	PODR11[R/W] B,H,W 00000000	
$000F2C_H$	PODR12[R/W] B,H,W 00000000	PODR13[R/W] B,H,W 00-00000	PODR14[R/W] B,H,W 00000000*4	PODR15[R/W] B,H,W 00000000*4	
$000F30_H$	PODR16[R/W] B,H,W 00000000*4	PODR17[R/W] B,H,W 00000000*4	PODR18[R/W] B,H,W 00000000*4	PODR19[R/W] B,H,W 00000000*4	
$000F34_H$	—	EPODR01 [R/W] B,H,W 00000000	EPODR02 [R/W] B,H,W 00000000	EPODR03 [R/W] B,H,W -0000000	Extended Port output drive register
$000F38_H$	EPODR06 [R/W] B,H,W 00000000	EPODR07 [R/W] B,H,W 00000000	EPODR08 [R/W] B,H,W 00000000	—	
$000F3C_H$	—	—	—	—	Reserved
$000F40_H$	PORTEN [R/W] B,H,W -------0	—	—	—	Port input enable register
$000F44_H$ to $000F6C_H$	—	—	—	—	Reserved
$000F70_H$	RCRH0[W] H,W XXXXXXXX	RCRL0[W] B,H,W XXXXXXXX	UDCRH0[R] H,W 00000000	UDCRL0[R] B,H,W 00000000	Up/down counter 0
$000F74_H$	CCR0[R/W] B,H 00000000 -0001000		—	CSR0[R/W] B 00000000	
$000F78_H$ to $000F7C_H$	—	—	—	—	Reserved

Address	Address offset value / Register name				Block
	+0	+1	+2	+3	
$000F80_H$	RCRH1[W] H,W XXXXXXXX	RCRL1[W] B,H,W XXXXXXXX	UDCRH1 [R] H,W 00000000	UDCRL1[R] B,H,W 00000000	Up/down counter 1
$000F84_H$	CCR1[R/W] B,H 00000000 -0001000		—	CSR1[R/W] B 00000000	
$000F88_H$ to $000F8C_H$	—	—	—	—	Reserved
$000F90_H$	OCCP4 [R/W] W 00000000 00000000 00000000 00000000				Output compare 4,5
$000F94_H$	OCCP5 [R/W] W 00000000 00000000 00000000 00000000				
$000F98_H$	OCFS45 [R/W] B, H, W ------11	—	OCSH45 [R/W] B, H, W ---0--00	OCSL45[R/W] B, H, W 0000--00	
$000F9C_H$	—	—	—	—	Reserved
$000FA0_H$	CPCLR2 [R/W] W 11111111 11111111 11111111 11111111				Free-run timer 2
$000FA4_H$	TCDT2 [R/W] W 00000000 00000000 00000000 00000000				
$000FA8_H$	TCCSH2 [R/W] B,H,W 0-----00	TCCSL2 [R/W] B,H,W -1-00000	—		
$000FAC_H$	CPCLR3 [R/W] W 11111111 11111111 11111111 11111111				Free-run timer 3
$000FB0_H$	TCDT3 [R/W] W 00000000 00000000 00000000 00000000				
$000FB4_H$	TCCSH3 [R/W] B,H,W 0-----00	TCCSL3 [R/W] B,H,W -1-00000	—		
$000FB8_H$	CPCLR4 [R/W] W 11111111 11111111 11111111 11111111				Free-run timer 4
$000FBC_H$	TCDT4 [R/W] W 00000000 00000000 00000000 00000000				
$000FC0_H$	TCCSH4 [R/W] B,H,W 0-----00	TCCSL4 [R/W] B,H,W -1-00000	—		
$000FC4_H$	CPCLR5 [R/W] W 11111111 11111111 11111111 11111111				Free-run timer 5
$000FC8_H$	TCDT5 [R/W] W 00000000 00000000 00000000 00000000				
$000FCC_H$	TCCSH5 [R/W]B,H,W 0-----00	TCCSL5 [R/W]B,H,W -1-00000	—		

Address	Address offset value / Register name				Block
	+0	+1	+2	+3	
$000FD0_H$	IPCP6 [R] W XXXXXXXX XXXXXXXX XXXXXXXX XXXXXXXX				Input capture 6,7
$000FD4_H$	IPCP7 [R] W XXXXXXXX XXXXXXXX XXXXXXXX XXXXXXXX				
$000FD8_H$	ICFS67 [R/W] B, H, W ------00	—	LSYNS1 [R/W] B,H,W ----0000	ICS67 [R/W] B, H, W 00000000	
$000FDC_H$	IPCP8 [R] W XXXXXXXX XXXXXXXX XXXXXXXX XXXXXXXX				Input capture 8,9
$000FE0_H$	IPCP9 [R] W XXXXXXXX XXXXXXXX XXXXXXXX XXXXXXXX				
$000FE4_H$	ICFS89 [R/W] B, H, W ------00	—	—	ICS89 [R/W] B, H, W 00000000	
$000FE8_H$	IPCP10 [R] W XXXXXXXX XXXXXXXX XXXXXXXX XXXXXXXX				Input capture 10,11
$000FEC_H$	IPCP11 [R] W XXXXXXXX XXXXXXXX XXXXXXXX XXXXXXXX				
$000FF0_H$	ICFS1011 [R/W] B, H, W ------00	—	—	ICS1011 [R/W] B, H, W 00000000	
$000FF4_H$ to $000FFC_H$	—	—	—	—	Reserved
001000_H	SACR [R/W] B,H,W -------0	PICD [R/W] B,H,W ----0011	—	—	Clock control
001004_H to $00103C_H$	—	—	—	—	Reserved
001040_H	—	SGDER0 [R/W] B,H,W 00000000	SGCR0[R/W] B,H,W -0000-0- 000--000		Sound generator 0
001044_H	SGAR0[R/W] B,H,W 00000000 00000000		SGFR0[R/W] B,H,W 00000000	SGNR0[R/W] B,H,W 00000000	
001048_H	SGTCR0[R/W] B,H,W 00000000	SGIDR0[R/W] B,H,W 00000000	SGPCR0[R/W] B,H,W 00000000 11111111		
$00104C_H$	SGDMAR0[W] B,H,W 00000000 00000000 00000000 00000000				
001050_H to $00105C_H$	—	—	—	—	Reserved
001060_H	—	SGDER1[R/W] B,H,W 00000000	SGCR1[R/W] B,H,W -0000-0- 000--000		Sound generator 1
001064_H	SGAR1[R/W] B,H,W 00000000 00000000		SGFR1[R/W] B,H,W 00000000	SGNR1[R/W] B,H,W 00000000	
001068_H	SGTCR1[R/W] B,H,W 00000000	SGIDR1[R/W] B,H,W 00000000	SGPCR1[R/W] B,H,W 00000000 11111111		
$00106C_H$	SGDMAR1[W] B,H,W 00000000 00000000 00000000 00000000				

Address	Address offset value / Register name				Block
	+0	+1	+2	+3	
001070_H to $00107C_H$	—	—	—	—	Reserved
001080_H	—	SGDER2[R/W] B,H,W 00000000	SGCR2[R/W] B,H,W -0000-0- 000--000		Sound generator 2
001084_H	SGAR2[R/W] B,H,W 00000000 00000000		SGFR2[R/W] B,H,W 00000000	SGNR2[R/W] B,H,W 00000000	
001088_H	SGTCR2[R/W] B,H,W 00000000	SGIDR2[R/W] B,H,W 00000000	SGPCR2[R/W] B,H,W 00000000 11111111		
$00108C_H$	SGDMAR2[W] B,H,W 00000000 00000000 00000000 00000000				
001090_H to $00109C_H$	—	—	—	—	Reserved
$0010A0_H$	—	SGDER3[R/W] B,H,W 00000000	SGCR3[R/W] B,H,W -0000-0- 000--000		Sound generator 3
$0010A4_H$	SGAR3[R/W] B,H,W 00000000 00000000		SGFR3[R/W] B,H,W 00000000	SGNR3[R/W] B,H,W 00000000	
$0010A8_H$	SGTCR3[R/W] B,H,W 00000000	SGIDR3[R/W] B,H,W 00000000	SGPCR3[R/W] B,H,W	00000000 11111111	
$0010AC_H$	SGDMAR3[W] B,H,W 00000000 00000000 00000000 00000000				
$0010B0_H$ to $0010BC_H$	—	—	—	—	Reserved
$0010C0_H$	—	SGDER4[R/W] B,H,W 00000000	SGCR4[R/W] B,H,W -0000-0- 000--000		Sound generator 4
$0010C4_H$	SGAR4[R/W] B,H,W 00000000 00000000		SGFR4[R/W] B,H,W 00000000	SGNR4[R/W] B,H,W 00000000	
$0010C8_H$	SGTCR4[R/W] B,H,W 00000000	SGIDR4[R/W] B,H,W 00000000	SGPCR4[R/W] B,H,W 00000000 11111111		
$0010CC_H$	SGDMAR4[W] B,H,W 00000000 00000000 00000000 00000000				
$0010D0_H$ to $00112C_H$	—	—	—	—	Reserved

Address	Address offset value / Register name				Block
	+0	+1	+2	+3	
001130_H	—	—	—	CRCCR[R/W] B,H,W -0000000	CRC operation
001134_H	CRCINIT[R/W] B,H,W 1111111 1111111 1111111 1111111				
001138_H	CRCIN[R/W] B,H,W 00000000 00000000 00000000 00000000				
$00113C_H$	CRCR[R] B,H,W 1111111 1111111 1111111 1111111				
001140_H to $001FFC_H$	—	—	—	—	Reserved

Address	Address offset value / Register name				Block
	+0	+1	+2	+3	
002000_H	CTRLR0 [R/W] B,H,W --------000-0001		STATR0[R/W] B,H,W -------- 00000000		CAN0 (64msb)
002004_H	ERRCNT0 [R] B,H,W 00000000 00000000		BTR0[R/W] B,H,W -0100011 00000001		
002008_H	INTR0 [R] B,H,W 00000000 00000000		TESTR0[R/W] B,H,W -------- X00000--		
$00200C_H$	BRPER0 [R/W] B,H,W -------- ----0000		—		
002010_H	IF1CREQ0 [R/W] B,H,W 0------- 00000001		IF1CMSK0 [R/W] B,H,W -------- 00000000		
002014_H	IF1MSK20 [R/W] B,H,W 11-11111 11111111		IF1MSK10 [R/W] B,H,W 11111111 11111111		
002018_H	IF1ARB20 [R/W] B,H,W 00000000 00000000		IF1ARB10 [R/W] B,H,W 00000000 00000000		
$00201C_H$	IF1MCTR0 [R/W] B,H,W 00000000 0---0000		—		
002020_H	IF1DTA10 [R/W] B,H,W 00000000 00000000		IF1DTA20[R/W] B,H,W 00000000 00000000		
002024_H	IF1DTB10 [R/W] B,H,W 00000000 00000000		IF1DTB20 [R/W] B,H,W 00000000 00000000		
002028_H, $00202C_H$	Reserved				
002030_H, 002034_H	Reserved (IF1 data mirror)				
002038_H, $00203C_H$	Reserved				
002040_H	IF2CREQ0 [R/W] B,H,W 0------- 00000001		IF2CMSK0 [R/W] B,H,W -------- 00000000		
002044_H	IF2MSK20 [R/W] B,H,W 11-11111 11111111		IF2MSK10 [R/W] B,H,W 11111111 11111111		
002048_H	IF2ARB20 [R/W] B,H,W 00000000 00000000		IF2ARB10 [R/W] B,H,W 00000000 00000000		
$00204C_H$	IF2MCTR0 [R/W] B,H,W 00000000 0---0000		—		

Address	Address offset value / Register name				Block
	+0	+1	+2	+3	
002050_H	IF2DTA10 [R/W] B,H,W 00000000 00000000		IF2DTA20 [R/W] B,H,W 00000000 00000000		CAN0 (64msb)
002054_H	IF2DTB10 [R/W] B,H,W 00000000 00000000		IF2DTB20 [R/W] B,H,W 00000000 00000000		
002058_H, $00205C_H$	Reserved				
002060_H, 002064_H	Reserved (IF2 data mirror)				
002068_H to $00207C_H$	Reserved				
002080_H	TREQR20 [R] B,H,W 00000000 00000000		TREQR10 [R] B,H,W 00000000 00000000		
002084_H	TREQR40 [R] B,H,W 00000000 00000000		TREQR30 [R] B,H,W 00000000 00000000		
002088_H	—		—		
$00208C_H$	—		—		
002090_H	NEWDT20 [R] B,H,W 00000000 00000000		NEWDT10 [R] B,H,W 00000000 00000000		
002094_H	NEWDT40 [R] B,H,W 00000000 00000000		NEWDT30 [R]B,H,W 00000000 00000000		
002098_H	—		—		
$00209C_H$	—		—		
$0020A0_H$	INTPND20 [R] B,H,W 00000000 00000000		INTPND10 [R] B,H,W 00000000 00000000		
$0020A4_H$	INTPND40 [R] B,H,W 00000000 00000000		INTPND30 [R] B,H,W 00000000 00000000		
$0020A8_H$	—		—		
$0020AC_H$	—		—		
$0020B0_H$	MSGVAL20 [R] B,H,W 00000000 00000000		MSGVAL10 [R] B,H,W 00000000 00000000		
$0020B4_H$	MSGVAL40 [R] B,H,W 00000000 00000000		MSGVAL30 [R] B,H,W 00000000 00000000		
$0020B8_H$	—		—		
$0020BC_H$	—		—		
$0020C0_H$ to $0020FC_H$	Reserved				

Address	Address offset value / Register name				Block
	+0	+1	+2	+3	
002100_H	CTRLR1 [R/W] B,H,W --------000-0001		STATR1[R/W] B,H,W -------- 00000000		CAN1 (32msb)
002104_H	ERRCNT1 [R] B,H,W 00000000 00000000		BTR1[R/W] B,H,W -0100011 00000001		
002108_H	INTR1 [R] B,H,W 00000000 00000000		TESTR1[R/W] B,H,W -------- X00000--		
$00210C_H$	BRPER1 [R/W] B,H,W -------- ----0000		—		
002110_H	IF1CREQ1 [R/W] B,H,W 0------- 00000001		IF1CMSK1 [R/W] B,H,W -------- 00000000		
002114_H	IF1MSK21 [R/W] B,H,W 11-11111 11111111		IF1MSK11 [R/W] B,H,W 11111111 11111111		
002118_H	IF1ARB21 [R/W] B,H,W 00000000 00000000		IF1ARB11 [R/W] B,H,W 00000000 00000000		
$00211C_H$	IF1MCTR1 [R/W] B,H,W 00000000 0---0000		—		
002120_H	IF1DTA11 [R/W] B,H,W 00000000 00000000		IF1DTA21 [R/W] B,H,W 00000000 00000000		
002124_H	IF1DTB11 [R/W] B,H,W 00000000 00000000		IF1DTB21 [R/W] B,H,W 00000000 00000000		
002128_H, $00212C_H$	Reserved				
002130_H, 002134_H	Reserved (IF1 data mirror)				
002138_H, $00213C_H$	Reserved				
002140_H	IF2CREQ1 [R/W] B,H,W 0------- 00000001		IF2CMSK1 [R/W] B,H,W -------- 00000000		
002144_H	IF2MSK21 [R/W] B,H,W 11-11111 11111111		IF2MSK11 [R/W] B,H,W 11111111 11111111		
002148_H	IF2ARB21 [R/W] B,H,W 00000000 00000000		IF2ARB11 [R/W] B,H,W 00000000 00000000		
$00214C_H$	IF2MCTR1 [R/W] B,H,W 00000000 0---0000		—		

Address	Address offset value / Register name				Block
	+0	+1	+2	+3	
002150_H	IF2DTA11 [R/W] B,H,W 00000000 00000000		IF2DTA21 [R/W] B,H,W 00000000 00000000		CAN1 (32msb)
002154_H	IF2DTB11 [R/W] B,H,W 00000000 00000000		IF2DTB21 [R/W] B,H,W 00000000 00000000		
002158_H, $00215C_H$	Reserved				
002160_H, 002164_H	Reserved (IF2 data mirror)				
002168_H to $00217C_H$	Reserved				
002180_H	TREQR21 [R] B,H,W 00000000 00000000		TREQR11 [R] B,H,W 00000000 00000000		
002184_H	—		—		
002188_H	—		—		
$00218C_H$	—		—		
002190_H	NEWDT21 [R] B,H,W 00000000 00000000		NEWDT11 [R] B,H,W 00000000 00000000		
002194_H	—		—		
002198_H	—		—		
$00219C_H$	—		—		
$0021A0_H$	INTPND21 [R] B,H,W 00000000 00000000		INTPND11 [R] B,H,W 00000000 00000000		
$0021A4_H$	—		—		
$0021A8_H$	—		—		
$0021AC_H$	—		—		
$0021B0_H$	MSGVAL21 [R] B,H,W 00000000 00000000		MSGVAL11 [R] B,H,W 00000000 00000000		
$0021B4_H$	—		—		
$0021B8_H$	—		—		
$0021BC_H$	—		—		
$0021C0_H$ to $0021FC_H$	Reserved				

Address	Address offset value / Register name				Block
	+0	+1	+2	+3	
002200_H	CTRLR2 [R/W] B,H,W -------- 000-0001		STATR2[R/W] B,H,W -------- 00000000		CAN2 (32msb)
002204_H	ERRCNT2[R] B,H,W 00000000 00000000		BTR2[R/W] B,H,W -0100011 00000001		
002208_H	INTR2[R] B,H,W 00000000 00000000		TESTR2[R/W] B,H,W -------- X00000--		
$00220C_H$	BRPER2 [R/W] B,H,W -------- ----0000		—		
002210_H	IF1CREQ2[R/W] B,H,W 0------- 00000001		IF1CMSK2[R/W] B,H,W -------- 00000000		
002214_H	IF1MSK22 [R/W] B,H,W 11-11111 11111111		IF1MSK12[R/W] B,H,W 11111111 11111111		
002218_H	IF1ARB22 [R/W] B,H,W 00000000 00000000		IF1ARB12[R/W] B,H,W 00000000 00000000		
$00221C_H$	IF1MCTR2[R/W] B,H,W 00000000 0---0000		—		
002220_H	IF1DTA12 [R/W] B,H,W 00000000 00000000		IF1DTA22[R/W] B,H,W 00000000 00000000		
002224_H	IF1DTB12 [R/W] B,H,W 00000000 00000000		IF1DTB22[R/W] B,H,W 00000000 00000000		
002228_H, $00222C_H$	Reserved				
002230_H, 002234_H	Reserved (IF1 data mirror)				
002238_H, $00223C_H$	Reserved				
002240_H	IF2CREQ2[R/W] B,H,W 0------- 00000001		IF2CMSK2[R/W] B,H,W -------- 00000000		
002244_H	IF2MSK22 [R/W] B,H,W 11-11111 11111111		IF2MSK12[R/W] B,H,W 11111111 11111111		
002248_H	IF2ARB22[R/W] B,H,W 00000000 00000000		IF2ARB12[R/W] B,H,W 00000000 00000000		
$00224C_H$	IF2MCTR2[R/W] B,H,W 00000000 0---0000		—		
002250_H	IF2DTA12[R/W] B,H,W 00000000 00000000		IF2DTA22[R/W] B,H,W 00000000 00000000		
002254_H	IF2DTB12[R/W] B,H,W 00000000 00000000		IF2DTB22[R/W] B,H,W 00000000 00000000		

Address	Address offset value / Register name				Block
	+0	+1	+2	+3	
002258_H, $00225C_H$	Reserved				CAN2 (32msb)
002260_H, 002264_H	Reserved (IF2 data mirror)				
002268_H to $00227C_H$	Reserved				
002280_H	TREQR22[R] B,H,W 00000000 00000000		TREQR12[R] B,H,W 00000000 00000000		
002284_H	—		—		
002288_H	—		—		
$00228C_H$	—		—		
002290_H	NEWDT22[R] B,H,W 00000000 00000000		NEWDT12[R] B,H,W 00000000 00000000		
002294_H	—		—		
002298_H	—		—		
$00229C_H$	—		—		
$0022A0_H$	INTPND22[R] B,H,W 00000000 00000000		INTPND12[R] B,H,W 00000000 00000000		
$0022A4_H$	—		—		
$0022A8_H$	—		—		
$0022AC_H$	—		—		
$0022B0_H$	MSGVAL22[R] B,H,W 00000000 00000000		MSGVAL12[R] B,H,W 00000000 00000000		
$0022B4_H$	—		—		
$0022B8_H$	—		—		
$0022BC_H$	—		—		
$0022C0_H$ to $0022FC_H$	—	—	—	—	Reserved
002300_H	DFCTLR[R/W] B,H,W -0------ --------		—	DFSTR[R/W] B,H,W -----001	WorkFlash
002304_H	—	—	—	—	
002308_H	FLIFCTLR [R/W] B,H,W ---0--00	—	FLIFFER1 [R/W] B,H,W --------	FLIFFER2 [R/W] B,H,W --------	Flash/ WorkFlash
$00230C_H$ to $0023FC_H$	—	—	—	—	Reserved

Address	Address offset value / Register name				Block
	+0	+1	+2	+3	
002400_H	SEEARX[R] B,H,W --000000 00000000 -0000000 00000000*4		DEEARX[R] B,H,W --000000 00000000 -0000000 00000000*4		XBS RAM ECC control register *4: MB91F578/9 only
002404_H	EECSRX[R/W] B,H,W ----0000	—	EFEARX [R/W] B,H,W --000000 00000000 -0000000 00000000*4		
002408_H	—		EFECRX [R/W] B,H,W -------0 00000000 00000000		
$00240C_H$ to $002FFC_H$	—	—	—	—	Reserved
003000_H	SEEARA[R] B,H,W -----000 00000000 ----0000 00000000*4		DEEARA[R] B,H,W -----000 00000000 ----0000 00000000*4		Backup RAM ECC control register *4: MB91F578/9 only
003004_H	EECSRA[R/W] B,H,W ----0000	—	EFEARA[R/W] B,H,W -----000 00000000 ----0000 00000000*4		
003008_H	—		EFECRA [R/W] B,H,W -------0 00000000 00000000		
$00300C_H$ to $003FFC_H$	—	—	—	—	Reserved
004000_H to $007FFC_H$	Backup-RAM*5				Backup RAM area
008000_H to $00FEFC_H$	—	—	—	—	Reserved ($00F000_H$ to[S])
$00FF00_H$	DSUCR [R/W] B,H,W -------- -------0		—	—	OCDU [S]
$00FF04_H$ to $00FF0C_H$	—	—	—	—	Reserved [S]
$00FF10_H$	PCSR [R/W] B,H,W XXXXXXXX XXXXXXXX XXXXXXXX XXXXXXXX				OCDU [S]
$00FF14_H$	PSSR [R/W] B,H,W XXXXXXXX XXXXXXXX XXXXXXXX XXXXXXXX				
$00FF18_H$ to $00FFF4_H$	—	—	—	—	Reserved [S]

Address	Address offset value / Register name				Block
	+0	+1	+2	+3	
$00FFF8_H$	EDIR1 [R] B,H,W XXXXXXXX XXXXXXXX XXXXXXXX XXXXXXXX				OCDU [S]
$00FFFC_H$	EDIR0 [R] B,H,W XXXXXXXX XXXXXXXX XXXXXXXX XXXXXXXX				

[S] : It is a system register. The illegal instruction exception (data access error) is generated when read/write is performed on these registers in the user mode.

*3: The initial value is different by part number. For details, refer to the CSVCR register in chapter “Clock Supervisor”

*4: MB91F578/9 only

*5: See the maximum size of series on the memory map

12. Interrupt Vector Table

This list shows the assignments of interrupt factors and interrupt vectors/interrupt control registers.

Interrupt Vector

Interrupt factor	Interrupt number		Interrupt level	Offset	Default address for TBR	RN *1
	Decimal	Hexa-decimal				
Reset	0	00	-	$3FC_H$	$000FFFFC_H$	-
System reserved	1	01	-	$3F8_H$	$000FFFF8_H$	-
System reserved	2	02	-	$3F4_H$	$000FFFF4_H$	-
System reserved	3	03	-	$3F0_H$	$000FFFF0_H$	-
System reserved	4	04	-	$3EC_H$	$000FFFEC_H$	-
FPU exception	5	05	-	$3E8_H$	$000FFFE8_H$	-
Exception of instruction access protection violation	6	06	-	$3E4_H$	$000FFFE4_H$	-
Exception of data access protection violation	7	07	-	$3E0_H$	$000FFFE0_H$	-
Data access error interrupt	8	08	-	$3DC_H$	$000FFFDC_H$	-
INTE instruction	9	09	-	$3D8_H$	$000FFFD8_H$	-
Instruction break	10	0A	-	$3D4_H$	$000FFFD4_H$	-
System Reserved	11	0B	-	$3D0_H$	$000FFFD0_H$	-
System Reserved	12	0C	-	$3CC_H$	$000FFFCC_H$	-
System Reserved	13	0D	-	$3C8_H$	$000FFFC8_H$	-
Exception of illegal instruction	14	0E	-	$3C4_H$	$000FFFC4_H$	-
NMI request/ XBS RAM double-bit error detection/ Backup RAM double-bit error detection	15	0F	15 (F_H) Fixed	$3C0_H$	$000FFFC0_H$	-
External interrupt 0-7	16	10	ICR00	$3BC_H$	$000FFFBC_H$	0
External interrupt 8-15	17	11	ICR01	$3B8_H$	$000FFFB8_H$	1
Reload timer 0/1/4/5	18	12	ICR02	$3B4_H$	$000FFFB4_H$	2(*2)
Reload timer 2/3/6	19	13	ICR03	$3B0_H$	$000FFFB0_H$	3(*2)
Multi-function serial interface ch.0 (reception completed)/ Multi-function serial interface ch.0 (status)	20	14	ICR04	$3AC_H$	$000FFFAC_H$	4 (*3)
Multi-function serial interface ch.0 (transmission completed)	21	15	ICR05	$3A8_H$	$000FFFA8_H$	5
Multi-function serial interface ch.1 (reception completed)/ Multi-function serial interface ch.1 (status)	22	16	ICR06	$3A4_H$	$000FFFA4_H$	6 (*3)
Multi-function serial interface ch.1 (transmission completed)	23	17	ICR07	$3A0_H$	$000FFFA0_H$	7
LIN-UART2 (reception completed)	24	18	ICR08	$39C_H$	$000FFF9C_H$	8
LIN-UART2 (transmission completed)	25	19	ICR09	398_H	$000FFF98_H$	9
LIN-UART3 (reception completed)	26	1A	ICR10	394_H	$000FFF94_H$	10

Interrupt factor	Interrupt number		Interrupt level	Offset	Default address for TBR	RN *1
	Decimal	Hexa-decimal				
LIN-UART3 (transmission completed)	27	1B	ICR11	390_H	$000FFF90_H$	11
LIN-UART4 (reception completed)	28	1C	ICR12	$38C_H$	$000FFF8C_H$	12
LIN-UART4 (transmission completed)	29	1D	ICR13	388_H	$000FFF88_H$	13
LIN-UART5 (reception completed)	30	1E	ICR14	384_H	$000FFF84_H$	14
LIN-UART5 (transmission completed)	31	1F	ICR15	380_H	$000FFF80_H$	15
LIN-UART6 (reception completed)	32	20	ICR16	$37C_H$	$000FFF7C_H$	16
LIN-UART6 (transmission completed)	33	21	ICR17	378_H	$000FFF78_H$	17
CAN0	34	22	ICR18	374_H	$000FFF74_H$	-
CAN1	35	23	ICR19	370_H	$000FFF70_H$	-
CAN2/ Up/down counter 0/ Up/down counter 1	36	24	ICR20	$36C_H$	$000FFF6C_H$	-
Real time clock	37	25	ICR21	368_H	$000FFF68_H$	-
Sound generator 0 / LIN-UART7 (reception completed)	38	26	ICR22	364_H	$000FFF64_H$	22
Sound generator 1 / LIN-UART7 (transmission completed)	39	27	ICR23	360_H	$000FFF60_H$	23
PPG0/1/10/11/20/21	40	28	ICR24	$35C_H$	$000FFF5C_H$	24
PPG2/3/12/13/22/23	41	29	ICR25	358_H	$000FFF58_H$	25
PPG4/5/14/15	42	2A	ICR26	354_H	$000FFF54_H$	26
PPG6/7/16/17	43	2B	ICR27	350_H	$000FFF50_H$	27
PPG8/9/18/19	44	2C	ICR28	$34C_H$	$000FFF4C_H$	28
Multi-function serial interface ch.8 (reception completed)/ Multi-function serial interface ch.8 (status) / HS_SPI reception interrupt request	45	2D	ICR29	348_H	$000FFF48_H$	29 (*4)
Main timer/Sub timer/PLL timer / Multi-function serial interface ch.8(transmission completed)/ HS_SPI transmission interrupt request	46	2E	ICR30	344_H	$000FFF44_H$	30 (*4)
Clock calibration unit (Sub oscillation) / Sound generator 4/ Multi-function serial interface ch.9 (reception completed) / Multi-function serial interface ch.9 (status)	47	2F	ICR31	340_H	$000FFF40_H$	31 (*5)
A/D converter	48	30	ICR32	$33C_H$	$000FFF3C_H$	32
Clock calibration Unit (CR oscillation) / Multi-function serial interface ch.9 (transmission completed)	49	31	ICR33	338_H	$000FFF38_H$	33 (*5)
Free-run timer 0/2/4	50	32	ICR34	334_H	$000FFF34_H$	-
Free-run timer 1/3/5	51	33	ICR35	330_H	$000FFF30_H$	-
ICU0/6 (fetching)	52	34	ICR36	$32C_H$	$000FFF2C_H$	36
ICU1/7 (fetching)	53	35	ICR37	328_H	$000FFF28_H$	37
ICU2/8 (fetching)	54	36	ICR38	324_H	$000FFF24_H$	38
ICU3/9 (fetching)	55	37	ICR39	320_H	$000FFF20_H$	39
ICU4/10 (fetching)	56	38	ICR40	$31C_H$	$000FFF1C_H$	40
ICU5/11 (fetching)	57	39	ICR41	318_H	$000FFF18_H$	41

Interrupt factor	Interrupt number		Interrupt level	Offset	Default address for TBR	RN *1
	Decimal	Hexa-decimal				
OCU0/1/6/7/10/11 (match)	58	3A	ICR42	314_H	$000FFF14_H$	42
OCU2/3/4/5/8/9 (match)	59	3B	ICR43	310_H	$000FFF10_H$	43
Base timer 0 IRQ0 / Base timer 0 IRQ1 / Sound generator 2	60	3C	ICR44	$30C_H$	$000FFF0C_H$	44
Base timer 1 IRQ0 / Base timer 1 IRQ1 / Sound generator 3 / XBS RAM single bit error generation / Backup RAM single bit error generation	61	3D	ICR45	308_H	$000FFF08_H$	45 (*6)
DMAC0/1/2/3/4/5/6/7/8/9/10/11/12/13/14/15	62	3E	ICR46	304_H	$000FFF04_H$	-
Delayed interrupt	63	3F	ICR47	300_H	$000FFF00_H$	-
System reserved (Used for REALOS™*7.)	64	40	-	$2FC_H$	$000FFEFC_H$	-
System reserved (Used for REALOS.)	65	41	-	$2F8_H$	$000FFEF8_H$	-
Used with the INT instruction.	66 | 255	42 | FF	-	$2F4_H$ | 000_H	$000FFEF4_H$ | $000FFC00_H$	-

*1: It does not support the DMA transfer request by the interrupt generated from a peripheral to which no RN (Resource Number) is assigned.

*2: Reload timer ch.4 to ch.6 does not support the DMA transfer by the interrupt.

*3: The status of the multi-function serial interface does not support the DMA transfer by I^2C reception.

*4: HS_SPI does not support the DMA transfer by the interrupt.

*5: The clock calibration unit does not support the DMA transfer by the interrupt.

*6: It does not support the DMA transfer by the interrupt because of the RAM ECC bit error.

*7: REALOS is the trademark of Cypress.

13. Electrical Characteristics

13.1 Absolute Maximum Ratings

Parameter	Symbol	Rating		Unit	Remarks
		Min	Max		
Power supply voltage*1,*2	$V_{CC}5$	V_{SS}-0.3	V_{SS}+6.0	V	
	DV_{CC}	V_{SS}-0.3	V_{SS}+6.0	V	$DV_{CC} \leq V_{CC}5$
	$V_{CC}E$	V_{SS}-0.3	V_{SS}+6.0	V	$V_{CC}E \leq V_{CC}5$
Analog power supply voltage*1,*2	AV_{CC}	V_{SS}-0.3	V_{SS}+6.0	V	$AVRH \leq AV_{CC} \leq V_{CC}5$
Analog reference voltage*1	AVRH	V_{SS}-0.3	V_{SS}+6.0	V	$AVRH \leq AV_{CC}$
Input voltage*1	V_{I1}	V_{SS}-0.3	$V_{CC}5$+0.3	V	
	V_{I2}	V_{SS}-0.3	$V_{CC}5$+0.3	V	SMC shared pin
	V_{IE}	V_{SS}-0.3	$V_{CC}5$+0.3	V	
Analog pin input voltage*1	$V_{IA}5$	V_{SS}-0.3	$V_{CC}5$+0.3	V	
Output voltage*1	V_{O1}	V_{SS}-0.3	$V_{CC}5$+0.3	V	
	V_{O2}	V_{SS}-0.3	$V_{CC}5$+0.3	V	SMC shared pin
	V_{OE}	V_{SS}-0.3	$V_{CC}5$+0.3	V	
Maximum clamp current	I_{CLAMP}	-4	4	mA	*8
Total maximum clamp current	$\Sigma\|I_{CLAMP}\|$	—	20	mA	*8
"L" level maximum output current *3	I_{OL1}	—	7	mA	2mA is selected*6
	I_{OL2}	—	40	mA	30mA is selected *7
"L" level average output current *4	I_{OLAV1}	—	2	mA	2mA is selected *6
	I_{OLAV2}	—	30	mA	30mA is selected *7
"L" level total output current*5	ΣI_{OL1}	—	50	mA	*6
	ΣI_{OL2}	—	250	mA	*7
"H" level maximum output current*3	I_{OH1} *3	—	-7	mA	2mA is selected*6
	I_{OH2} *3	—	-40	mA	30mA is selected *7
"H" level average output current*4	I_{OHAV1} *4	—	-2	mA	2mA is selected *6
	I_{OHAV2} *4	—	-30	mA	30mA is selected *7
"H" level total output current*5	ΣI_{OH1}	—	-50	mA	*6
	ΣI_{OH2}	—	-250	mA	*7
Power consumption	P_D	—	710	mW	
Operating temperature	T_A	-40	+105	°C	
Storage temperature	Tstg	-55	+150	°C	

*1: This parameter is based on $V_{SS} = AV_{SS} = DV_{SS} = 0.0V$.

*2: Caution must be taken that AV_{CC}, DV_{CC}, and $V_{CC}E$ do not exceed $V_{CC}5$ upon power-on and under other circumstances.

*3: Maximum output current is defined as the value of the peak current flowing through any one of the corresponding pins.

*4: Average output current is defined as the value of the average current flowing through any one of the corresponding pins for a 10 ms period. The average value is the operation current × the operation ratio.

*5: The total output current is defined as the maximum current value flowing through all of corresponding pins.

*6: Outputs other than P60-P87 pins

*7: Output of P60-P87 pins

*8:

- Corresponding pins: all general-purpose ports. (Except P010 to P017, P020 to P027, P030 to P037, P040 to P047, P050 to P053, P90/ADTG/PPG0_2)
- Use within recommended operating conditions.
- Use at DC voltage (current).
- The + B signal should always be applied by connecting a limiting resistor between the + B signal and the microcontroller.
- The value of the limiting resistor should be set so that the current input to the microcontroller pin does not exceed rated values at any time regardless of instantaneously or constantly when the + B signal is input.
- Note that when the microcontroller drive current is low, such as in the low power consumption modes, the + B input potential can increase the potential at the V_{CC} pin via a protective diode, possibly affecting other devices.
- Note that if the + B signal is input when the microcontroller is off (not fixed at 0 V), since the power is supplied through the pin, the microcontroller may operate incompletely.
- Note that if the +B signal is input at power-on, since the power is supplied through the pin, the power-on reset may not function in the power supply voltage.
- Do not leave + B input pins open.

Sample recommended circuit

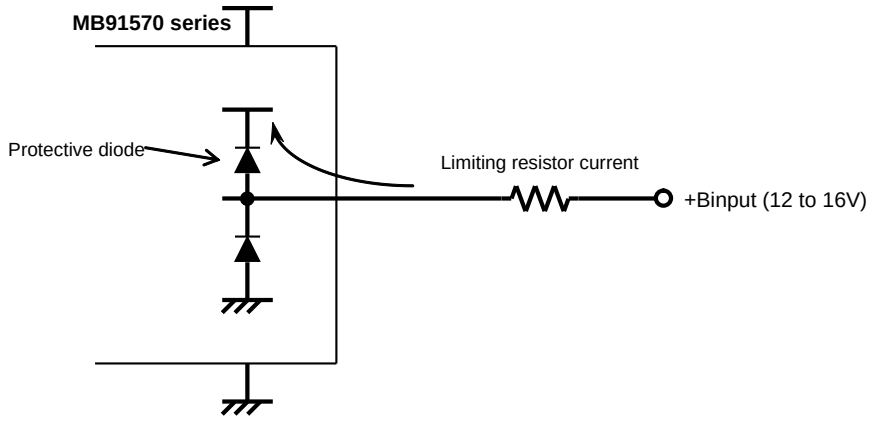

WARNING:

Semiconductor devices may be permanently damaged by application of stress (including, without limitation, voltage, current or temperature) in excess of absolute maximum ratings. Do not exceed any of these ratings.

13.2 Recommended operating conditions

(V_{SS} = DV_{SS} = AV_{SS} = 0.0V)

Parameter	Symbol	Value		Unit	Remarks
		Min	Max		
Power supply voltage	$V_{CC}5$	4.5	5.5	V	Recommended operation guarantee range
	DV_{CC}	4.5	5.5	V	
	$AV_{CC}5$	4.5	5.5	V	
	$V_{CC}E$	3.0	5.5	V	
	$V_{CC}5$	3.5	5.5	V	Operation guarantee range
	DV_{CC}	3.5	5.5	V	
	$AV_{CC}5$	3.5	5.5	V	
	$V_{CC}E$	2.7	5.5	V	
Smoothing capacitor *	C_S	4.7 (tolerance within±50%)		µF	Use a ceramic capacitor or a capacitor that has the similar frequency characteristics. Use a capacitor with a capacitance greater than C_S as the smoothing capacitor on the V_{CC} pin.
Operating temperature	T_A	-40	+105	°C	

*: Refer to the following diagram for details on the connection of smoothing capacitor C_S.

C Pin Connection Diagram

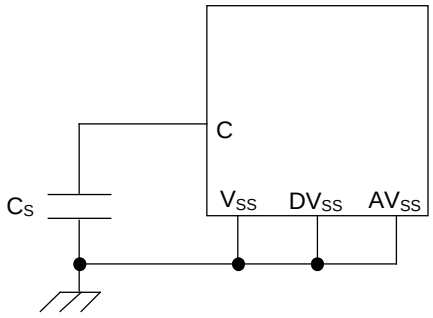

WARNING:

The recommended operating conditions are required in order to ensure the normal operation of the semiconductor device. All of the device's electrical characteristics are warranted when the device is operated under these conditions.
Any use of semiconductor devices will be under their recommended operating condition. Operation under any conditions other than these conditions may adversely affect reliability of device and could result in device failure. No warranty is made with respect to any use, operating conditions or combinations not represented on this data sheet. If you are considering application under any conditions other than listed herein, please contact sales representatives beforehand.

13.3 DC characteristics

(T_A: Recommended operating conditions, $V_{CC}5$ = 5.0V±10%, $V_{CC}E$ = 5.0V±10%, V_{SS} = DV_{SS} = AV_{SS} = 0.0V)

Parameter	Symbol	Pin name	Condition	Value			Unit	Remarks
				Min	Typ	Max		
"H" level input voltage	V_{IH1}	P010 to P017, P020 to P027, P030 to P036	CMOS input level is selected	$0.7\times V_{CC}E$	—	$V_{CC}5$ +0.3	V	*
	V_{IH2}		CMOS hysteresis input level is selected	$0.7\times V_{CC}E$	—	$V_{CC}5$ +0.3	V	*
	V_{IH3}		Automotive input level is selected	$0.8\times V_{CC}E$	—	$V_{CC}5$ +0.3	V	*
	V_{IH4}		TTL input level is selected	2.0	—	$V_{CC}5$ +0.3	V	*
	V_{IH5}	P000 to P007, P037, P040 to P047, P050 to P057, P060 to P067, P070 to P077, P080 to P087, P090 to P097, P100 to P107, P110 to P117, P120 to P127, P130 to P137, P140 to P147, P150 to P157, P160 to P167, P170 to P177, P180 to P187, P190 to P197*1	CMOS input level is selected	$0.7\times V_{CC}5$	—	$V_{CC}5$ +0.3	V	
	V_{IH6}		CMOS hysteresis input level is selected	$0.7\times V_{CC}5$	—	$V_{CC}5$ +0.3	V	
	V_{IH7}		Automotive input level is selected	$0.8\times V_{CC}5$	—	$V_{CC}5$ +0.3	V	
	V_{IH8}		TTL input level is selected	2.0	—	$V_{CC}5$ +0.3	V	
	V_{IH9}	RSTX, NMIX, MD2	—	$0.7\times V_{CC}5$	—	$V_{CC}5$ +0.3	V	
	V_{IH10}	MD0, MD1	—	$0.7\times V_{CC}5$	—	$V_{CC}5$ +0.3	V	
	V_{IH11}	DEBUGIF	—	2.0	—	$V_{CC}5$ +0.3	V	

* : $V_{CC}E$ = 5.0V±10%, or $V_{CC}E$ = 3.0 to 3.6V

*1: MB91F578/9 only supports P140 to P147, P150 to P157, P160 to P167, P170 to P177, P180 to P187, P190 to P197.

(T_A: Recommended operating conditions, $V_{CC}5$ = 5.0 V±10%, $V_{CC}E$ = 5.0 V±10%, V_{SS} = DV_{SS} = AV_{SS} = 0.0V)

Parameter	Symbol	Pin name	Condition	Value			Unit	Remarks
				Min	Typ	Max		
"L" level input voltage	V_{IL1}	P010 to P017, P020 to P027, P030 to P036	CMOS input level is selected	V_{SS} -0.3	—	0.3×$V_{CC}E$	V	*
	V_{IL2}		CMOS hysteresis input level is selected	V_{SS} -0.3	—	0.3×$V_{CC}E$	V	*
	V_{IL3}		Automotive input level is selected	V_{SS} -0.3	—	0.5×$V_{CC}E$	V	*
	V_{IL4}		TTL input level is selected	V_{SS} -0.3	—	0.8	V	*
	V_{IL5}	P000 to P007, P037, P040 to P047, P050 to P057, P060 to P067, P070 to P077, P080 to P087, P090 to P097, P100 to P107, P110 to P117, P120 to P127, P130 to P137, P140 to P147, P150 to P157, P160 to P167, P170 to P177, P180 to P187, P190 to P197[*1]	CMOS input level is selected	V_{SS} -0.3	—	0.3×$V_{CC}5$	V	
	V_{IL6}		CMOS hysteresis input level is selected	V_{SS} -0.3	—	0.3×$V_{CC}5$	V	
	V_{IL7}		Automotive input level is selected	V_{SS} -0.3	—	0.5×$V_{CC}5$	V	
	V_{IL8}		TTL input level is selected	V_{SS} -0.3	—	0.8	V	
	V_{IL9}	RSTX, NMIX, MD2	—	V_{SS} -0.3	—	0.3×$V_{CC}5$	V	
	V_{IL10}	MD0, MD1	—	V_{SS} -0.3	—	0.3×$V_{CC}5$	V	
	V_{IL11}	DEBUGIF	—	V_{SS} -0.3	—	0.8	V	

*: $V_{CC}E$ = 5.0V±10%, or $V_{CC}E$ = 3.0 to 3.6V

*1: MB91F578/9 only supports P140 to P147, P150 to P157, P160 to P167, P170 to P177, P180 to P187, P190 to P197.

(T_A: Recommended operating conditions, $V_{CC}5$ = 5.0V±10%, $V_{CC}E$ = 5.0V±10%, V_{SS} = DV_{SS} = AV_{SS} = 0.0V)

Parameter	Symbol	Pin name	Condition	Value			Unit	Remarks
				Min	Typ	Max		
"H" level output voltage	V_{OH1}	P010 to P017, P020 to P027, P030 to P036	$V_{CC}E$ = 3.0V I_{OH} = -0.5mA	$V_{CC}E$ -0.5	—	$V_{CC}E$	V	*
	V_{OH2}		$V_{CC}E$ = 3.0V I_{OH} = -1.0mA	$V_{CC}E$ -0.5	—	$V_{CC}E$	V	*
	V_{OH3}		$V_{CC}E$ = 3.0V I_{OH} = -2.0mA	$V_{CC}E$ -0.5	—	$V_{CC}E$	V	*
	V_{OH4}	P000 to P007, P037, P040 to P047, P050 to P056, P060 to P067, P070 to P077, P080 to P087, P090 to P097, P100 to P107, P110 to P117, P120 to P127, P130 to P137, P140 to P147, P150 to P157, P160 to P167, P170 to P177, P180 to P187, P190 to P197*1	$V_{CC}5$ = 4.5V I_{OH} = -1.0mA	$V_{CC}5$ -0.5	—	$V_{CC}5$	V	
	V_{OH5}		$V_{CC}5$ = 4.5V I_{OH} = -2.0mA	$V_{CC}5$ -0.5	—	$V_{CC}5$	V	
	V_{OH6}	P060 to P067, P070 to P077, P080 to P087	DV_{CC} = 4.5V I_{OH} = -30.0mA	DV_{CC} -0.5	—	DV_{CC}	V	SMC shared pin

* : $V_{CC}E$ = 5.0V±10%, or $V_{CC}E$ = 3.0 to 3.6V

*1: MB91F578/9 only supports P140 to P147, P150 to P157, P160 to P167, P170 to P177, P180 to P187, P190 to P197.

(T_A: Recommended operating conditions, $V_{CC}5$ = 5.0V±10%, $V_{CC}E$ = 5.0V±10%, V_{SS} = DV_{SS} = AV_{SS} = 0.0V)

Parameter	Symbol	Pin name	Condition	Value			Unit	Remarks
				Min	Typ	Max		
"L" level output voltage	V_{OL1}	P010 to P017, P020 to P027, P030 to P036	$V_{CC}E$ = 3.0V I_{OL} = 0.5mA	0	—	0.4	V	*
	V_{OL2}		$V_{CC}E$ = 3.0V I_{OL} = 1.0mA	0	—	0.4	V	*
	V_{OL3}		$V_{CC}E$ = 3.0V I_{OL} = 2.0mA	0	—	0.4	V	*
	V_{OL4}	P000 to P007, P037, P040 to P047, P050 to P056, P060 to P067, P070 to P077, P080 to P087, P090 to P097, P100 to P107, P110 to P117, P120 to P127, P130 to P137, P140 to P147, P150 to P157, P160 to P167, P170 to P177, P180 to P187, P190 to P197*1	$V_{CC}5$ = 4.5V I_{OL} = 1.0mA	0	—	0.4	V	
	V_{OL5}		$V_{CC}5$ = 4.5V I_{OL} = 2.0mA	0	—	0.4	V	
	V_{OL6}	P060 to P067, P070 to P077, P080 to P087	DV_{CC} = 4.5V I_{OL} = 30.0mA	0	—	0.55	V	SMC shared pin
	V_{OL7}	P127, P130, P132, P133	$V_{CC}5$ = 4.5V I_{OL} = 3.0mA	0	—	0.4	V	I^2C shared pin (I^2C is selected)
	V_{OL8}	DEBUGIF	$V_{CC}5$ = 2.7V I_{OL} = 25.0mA	0	—	0.25	V	

* : $V_{CC}E$ = 5.0V±10%, or $V_{CC}E$ = 3.0 to 3.6V

*1: MB91F578/9 only supports P140 to P147, P150 to P157, P160 to P167, P170 to P177, P180 to P187, P190 to P197.

(T_A: Recommended operating conditions, $V_{CC}5$ = 5.0V±10%, $V_{CC}E$ = 5.0V±10%, V_{SS} = DV_{SS} = AV_{SS} = 0.0V)

Parameter	Symbol	Pin name	Condition	Value			Unit	Remarks
				Min	Typ	Max		
Input leak current	II_{L1}	Port input pins other than P107,123	$V_{CC}5$ = $V_{CC}E$ = DV_{CC} = AV_{CC} =5.5V V_{SS}<V_I<V_{CC}	-5	—	+5	μA	
	II_{L2}	P107,P123 (DA shared pin)		-10	—	+10	μA	
Pull-up resistance	R_{UP1}	RSTX, NMIX	—	25	—	100	kΩ	
	R_{UP2}	All port input pins	Pull-up resistance is selected	25	—	100	kΩ	
Pull-down resistance	R_{DOWN1}	MD2	—	25	—	100	kΩ	
	R_{DOWN2}	All port input pins	Pull-down resistance is selected	25	—	100	kΩ	
Input capacitance	C_{IN1}	Other than VCCE, $V_{CC}5$, V_{SS}, DV_{CC}, DV_{SS}, AV_{CC}, AV_{SS}, C, P060 to P067, P070 to P077, P080 to P087	—	—	5	15	pF	
	C_{IN2}	P060 to P067, P070 to P077, P080 to P087	When using SMC	—	15	45	pF	

(T_A: Recommended operating conditions, $V_{CC}5$ = 5.0V±10%, $V_{CC}E$ = 5.0V±10%, V_{SS} = DV_{SS} = AV_{SS} = 0.0V)

Parameter	Symbol	Pin name	Condition	Value			Unit	Remarks
				Min	Typ	Max		
Power supply current	$I_{CC}5$	$V_{CC}5$	At normal operation Operating frequency F_{CP} = 80MHz, Fcpp = 40MHz	—	60	100	mA	*4
						125		*5
			FLASH write Operating frequency F_{CP} = 80MHz, Fcpp = 40MHz	—	75	115	mA	*3, *4
						140		*3, *5
			At FLASH erase Operating frequency F_{CP} = 80MHz, Fcpp = 40MHz	—	75	115	mA	*3, *4
						140		*3, *5
	$I_{CCS}5$		At sleep mode Operating frequency F_{CP} = 80MHz, Fcpp = 40MHz	—	20	60	mA	*4
						75		*5
	$I_{CCBS}5$		At bus sleep mode Operating frequency F_{CP} = 80MHz, Fcpp = 40MHz	—	15	55	mA	*4
						70		*5
	$I_{CCT}5$		At RTC mode 4MHz source oscillation	—	750	1400	μA	When using external clock*1, T_A = 25˚C
				—	900	1550	μA	When using crystal, T_A = 25˚C
	$I_{CCTS}5$		At RTC mode shutdown 4MHz source oscillation	—	170	330	μA	When using external clock*1, T_A = 25˚C
				—	320	480	μA	When using crystal, T_A = 25˚C
	$I_{CCH}5$		At stop mode	—	400	1200	μA	T_A = 25˚C
	$I_{CCHS}5$		At stop mode shutdown	—	120	240	μA	T_A = 25˚C

(T_A: Recommended operating conditions, $V_{CC}5$ = 5.0V±10%, $V_{CC}E$ = 5.0V±10%, V_{SS} = DV_{SS} = AV_{SS} = 0.0V)

Parameter	Symbol	Pin name	Condition	Value			Unit	Remarks
				Min	Typ	Max		
High current output drive capacity Phase-to-phase deviation1	ΔV_{OH6}	PWM1Pn, PWM1Mn, PWM2Pn, PWM2Mn (n = 0 to 5)	DV_{CC} = 4.5V I_{OH} = -30.0mA Maximum deviation of V_{OH6}	—	—	90	mV	*2
High current output drive capacity Phase-to-phase deviation2	ΔV_{OL6}	PWM1Pn, PWM1Mn, PWM2Pn, PWM2Mn (n = 0 to 5)	DV_{CC} = 4.5V I_{OL} = 30.0mA Maximum deviation of V_{OL6}	—	—	90	mV	*2
LCD divider resistor	R_{LCD}	V0 to V1, V1 to V2, V2 to V3	—	6.25	12.5	25	kΩ	
COM0 to COM3 output impedance	R_{VCOM}	COMm (m = 0 to 3)	—	—	—	4.5	kΩ	
SEG00 to SEG31 output impedance	R_{VSEG}	SEGn (n = 00 to 31)	—	—	—	17	kΩ	
LCDC leak current	I_{LCDC}	V0 to V3, COMm (m = 0 to 3), SEGn (n = 00 to 31)	T_A = +25˚C	-0.5	—	+0.5	μA	

*1: The power supply current value when the external clock is supplied from the X1 pin. Note that the power supply current value when using the external clock is different from that using the oscillator.

*2: If PWM1P0/PWM1M0/PWM2P0/PWM2M0 of ch.0 is turned on simultaneously, the maximum deviation of V_{OH6} / V_{OL6} for each pin is defined. Same for other channels.

*3: This product contains both program flash and WorkFlash. This parameter is defined when only one of them is in the write/erase state.

*4: MB91F575/7

*5: MB91F578/9

13.4 AC Characteristics

13.4.1 Main Clock Timing

(T_A: Recommended operating conditions, $V_{CC}5$ = 5.0V±10%, V_{SS} = DV_{SS} = AV_{SS} = 0.0V)

Parameter	Symbol	Pin name	Conditions	Value			Unit	Remarks
				Min	Typ	Max		
Source oscillation clock frequency	F_C	X0,X1	–	–	4	–	MHz	
Source oscillation clock cycle time	t_{CYL}	X0,X1	–	–	250	–	ns	
Internal operating clock cycle time*	F_{CP}	–	–	2	–	80	MHz	CPU clock
	F_{CPP}	–	–	2	–	40	MHz	Peripheral bus clock
	F_{CPT}	–	–	2	–	40	MHz	External bus clock
Internal operating clock cycle time*	t_{CP}	–	–	12.5	–	500	ns	CPU clock
	t_{CPP}	–	–	25	–	500	ns	Peripheral bus clock
	t_{CPT}	–	–	25	–	500	ns	External bus clock
CAN PLL jitter (when lock)	t_{PJ}	–	–	-10	–	+10	ns	F_{CP} = 80MHz (4MHz×Multiplied by 20)
Built-in CR oscillation frequency	F_{CCR}	–	–	50	100	200	kHz	

*: The maximum / minimum value is defined when using the main clock and PLL clock.

X0,X1 clock timing

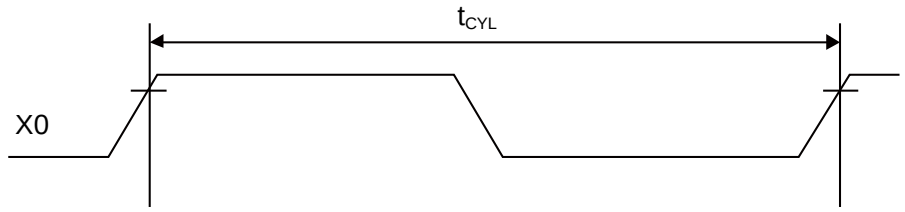

CAN PLL jitter

Deviation time from the ideal clock is assured per cycle out of 20, 000 cycles.

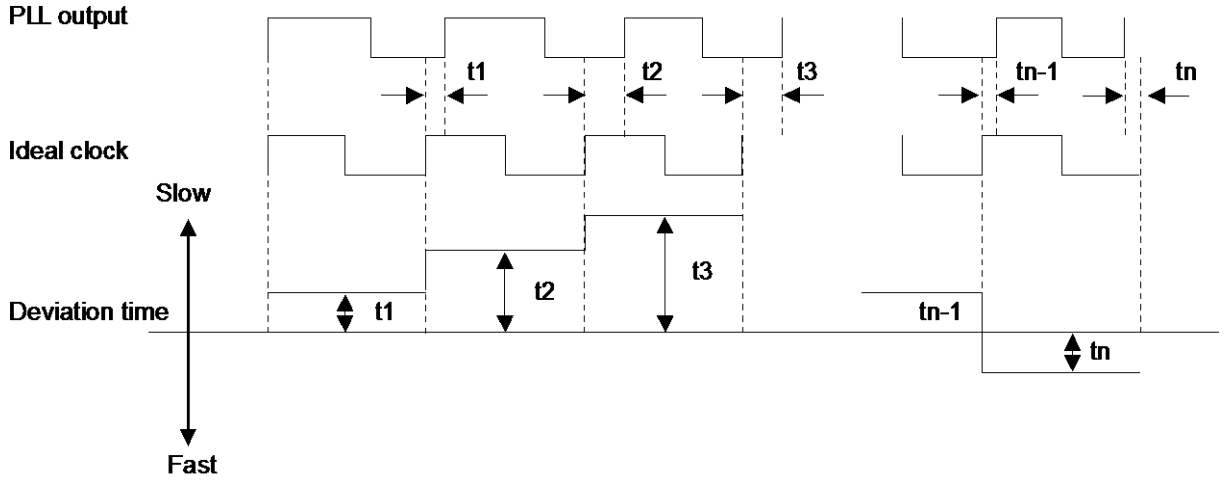

13.4.2 Sub clock timing (products without s-suffix)

(T_A: Recommended operating conditions, V_{CC} = 5.0V±10%, V_{SS} = DV_{SS} = AV_{SS} = 0.0V)

Parameter	Symbol	Pin name	Conditions	Value			Unit	Remarks
				Min	Typ	Max		
Source oscillation clock frequency	F_{CL}	X0A,X1A	–	–	32.768	–	kHz	
Source oscillation clock cycle time	t_{LCYL}	X0A,X1A		–	30.52	–	µs	

X0A,X1A clock timing

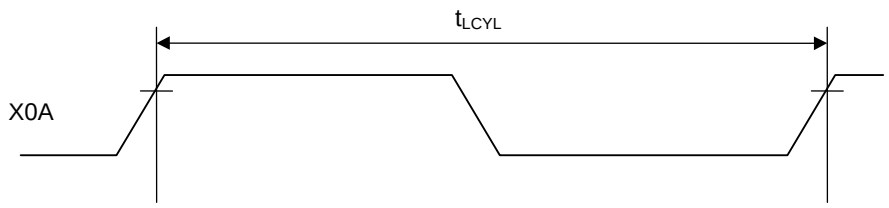

Guaranteed operation range

Internal operation clock frequency vs. Power supply voltage

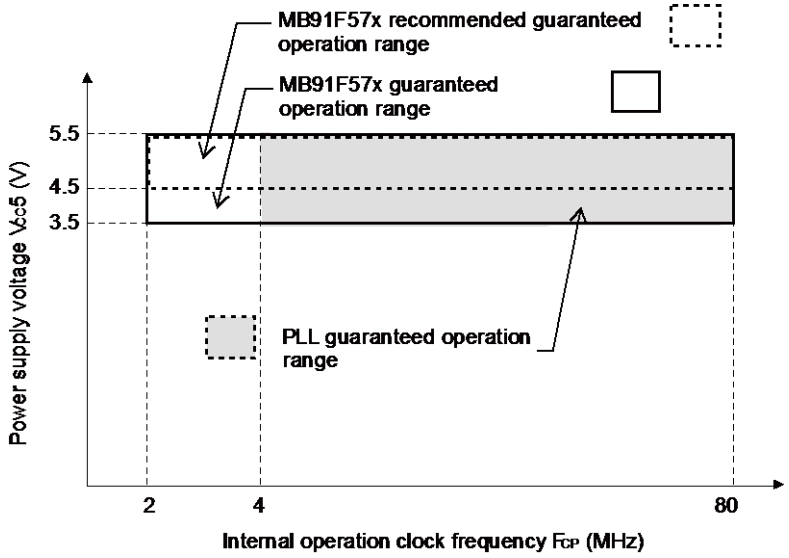

Note: The CPU will be reset at the power supply voltage 4V±0.3V or less.

Oscillation clock frequency vs. Internal operation clock frequency

		Internal operation clock frequency							
		Main Clock	PLL clock						
			Multiplied by 1	Multiplied by 2	Multiplied by 3	Multiplied by 4	...	Multiplied by 19	Multiplied by 20
Oscillation clock frequency	4MHz	2MHz	4MHz	8MHz	12MHz	16MHz	...	76MHz	80MHz

■Example of oscillation circuit

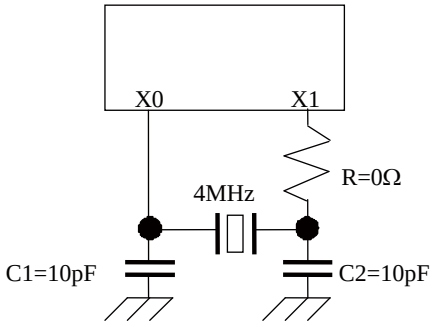

Note: As to the product with its clock supervisor's initial value is "ON", when the oscillator is unable to start within 20ms from the stop state the clock supervisor will detect the oscillation stop. As a result, the CPU moves to the fail safe operation.

Design your printed circuit board so that the oscillator can start oscillation within 20ms.

AC characteristics are specified by the following measurement reference voltage values.

Input Signal Waveform

Hysteresis Input Pin (Automotive)

Hysteresis Input Pin (CMOS Normal)

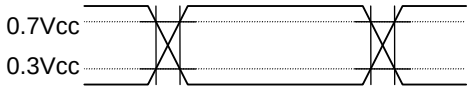

Hysteresis Input Pin (CMOS Hysteresis)

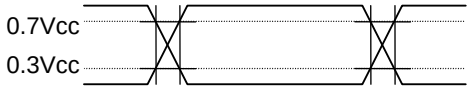

TTL Input Pin

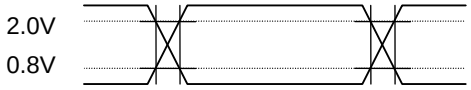

Output Signal Waveform

Output Pin

13.4.3 Reset Input

(T_A: Recommended operating conditions, $V_{CC}5$ = 5.0V±10%, V_{SS} = AV_{SS} = 0.0V)

Parameter	Symbol	Pin name	Conditions	Value		Unit	Remarks
				Min	Max		
Reset input time	t_{RSTL}	RSTX	–	10	–	µs	Under normal operation
				Oscillation time of oscillator* +100µs	–	ms	In Stop mode
				100µs	–	µs	In RTC mode
Width for reset input removal				1µs	–	µs	

*: The oscillation time of the oscillator is the time it takes for the amplitude of the oscillations to reach 90%.

For crystal oscillators, this time is between several ms and several tens of ms, for ceramic oscillators the time is between several hundred µs and several ms, and for an external clock, the time is 0 ms.

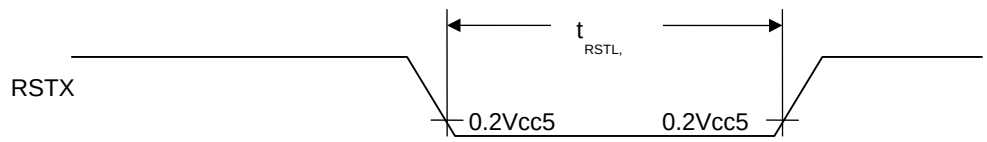

In Stop mode

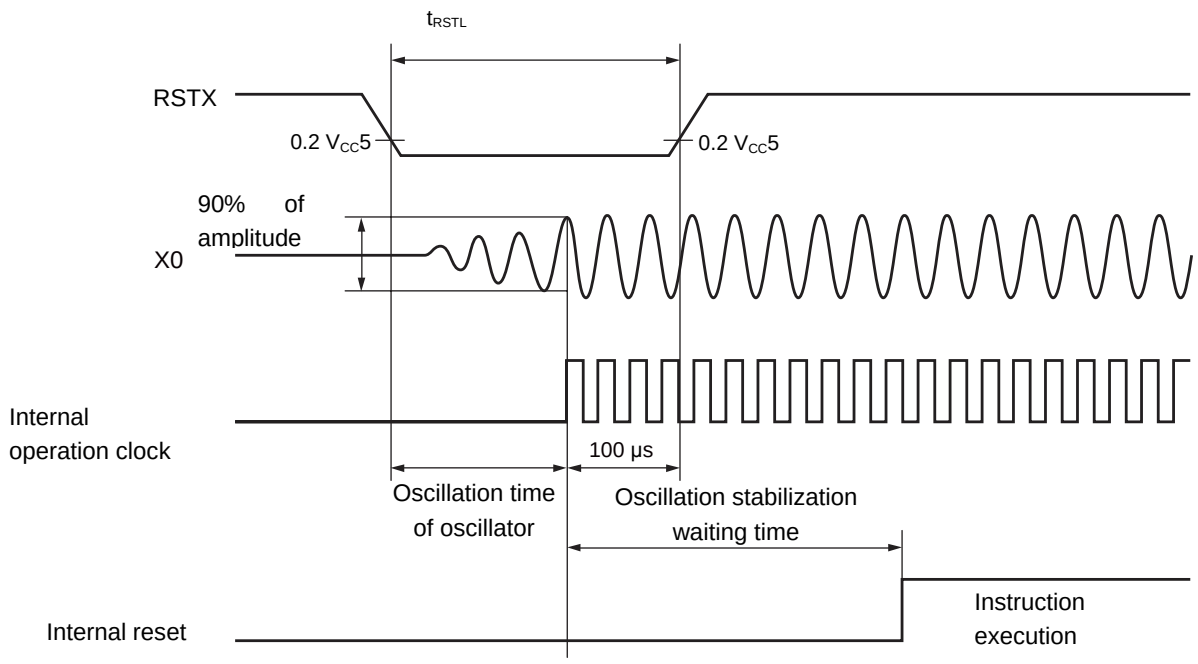

13.4.4 Power-on Conditions

(T_A: Recommended operating conditions, V_{SS} = 0.0V)

Parameter	Symbol	Pin name	Conditions	Value			Unit	Remarks
				Min	Typ	Max		
Level detection voltage	–	$V_{CC}5$	–	2.1	2.3	2.5	V	When turning on power for microcontroller
Level detection hysteresis width	–	$V_{CC}5$	–	–	–	125	mV	During voltage drop
Level detection time	–	–	–	–	–	30	us	*1
Slope detection undetected standard	–	$V_{CC}5$	$V_{CC}5$ = at level detection release level time	–	–	4	mV/µs	*2
Power off time	t_{OFF}	$V_{CC}5$	–	50	–	–	ms	*3

*1: If the fluctuation of the power supply is faster than the low voltage detection time, there is the possibility to generate or release after the power supply voltage has exceeded the detection voltage range.

*2: When setting the power supply fluctuation to this standard or less, it is possible to suppress the slope detection. This is the standard when the power supply fluctuation is stable.

*3: This time is to start the slope detection at next power on after power down and internal charge loss

13.4.5 Multi-function Serial

13.4.5.1 UART timing

Bit setting: SMR: MD2 = 0, SMR : MD1 = 1, SMR: MD0 = 0, SMR: SCINV = 0, SCR: SPI = 0

(T_A: Recommended operating conditions, $V_{CC}5$ = 5.0V±10%, $V_{CC}E$ = 5.0V±10%, V_{SS} = AV_{SS} = 0.0V)

Parameter	Symbol	Pin name	Conditions	Value		Unit	Remarks
				Min	Max		
Serial clock cycle time	t_{SCYC}	SCK0, SCK1, SCK8, SCK9	—	$4t_{CPP}$	—	ns	Internal shift clock mode: C_L = 50pF (When drive capability is 2mA or more.) C_L = 20pF(When drive capability is 1mA)
SCK ↓→ SOT delay time	t_{SLOVI}	SCK0, SCK1, SCK8, SCK9, SOT0, SOT1, SOT8, SOT9		-30	+30	ns	
Valid SIN→ SCK ↑ setup time	t_{IVSHI}	SCK0, SCK1, SCK8, SCK9, SIN0, SIN1, SIN8, SIN9		34	—	ns	
SCK ↑→ Valid SIN hold time	t_{SHIXI}			0	—	ns	
Serial clock "H" pulse width	t_{SHSL}	SCK0, SCK1, SCK8, SCK9	—	t_{CPP}+10	—	ns	External shift clock mode: C_L = 50pF (When drive capability is 2mA or more.) C_L = 20pF(When drive capability is 1mA)
Serial clock "L" pulse width	t_{SLSH}			$2t_{CPP}$-10	—	ns	
SCK ↓→ SOT delay time	t_{SLOVE}	SCK0, SCK1, SCK8, SCK9, SOT0, SOT1, SOT8, SOT9		—	33	ns	
Valid SIN→ SCK ↑setup time	t_{IVSHE}	SCK0, SCK1, SCK8, SCK9, SIN0, SIN1, SIN8, SIN9		10	—	ns	
SCK ↑→ Valid SIN hold time	t_{SHIXE}			20	—	ns	
SCK fall time	t_F	SCK0, SCK1, SCK8, SCK9		—	5	ns	
SCK rise time	t_R	SCK0, SCK1, SCK8, SCK9		—	5	ns	

Notes:

- AC characteristic in CLK synchronized mode.
- C_L is the load capacitance applied to pins during testing.
- The maximum baud rate is limited by the internal operation clock used and other parameters. Refer to Hardware Manual for details.

• Internal shift clock mode

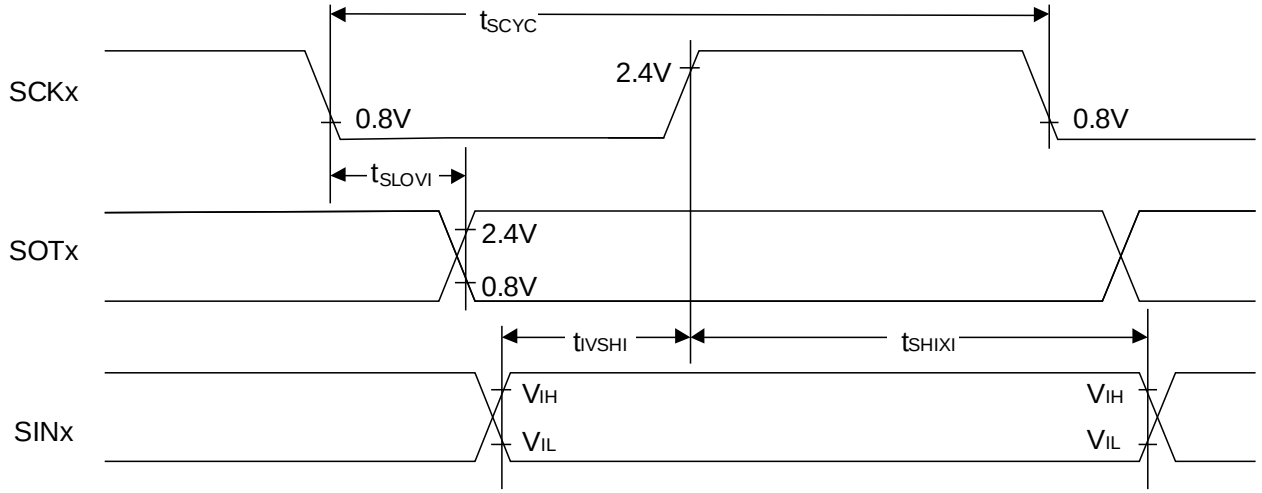

• External shift clock mode

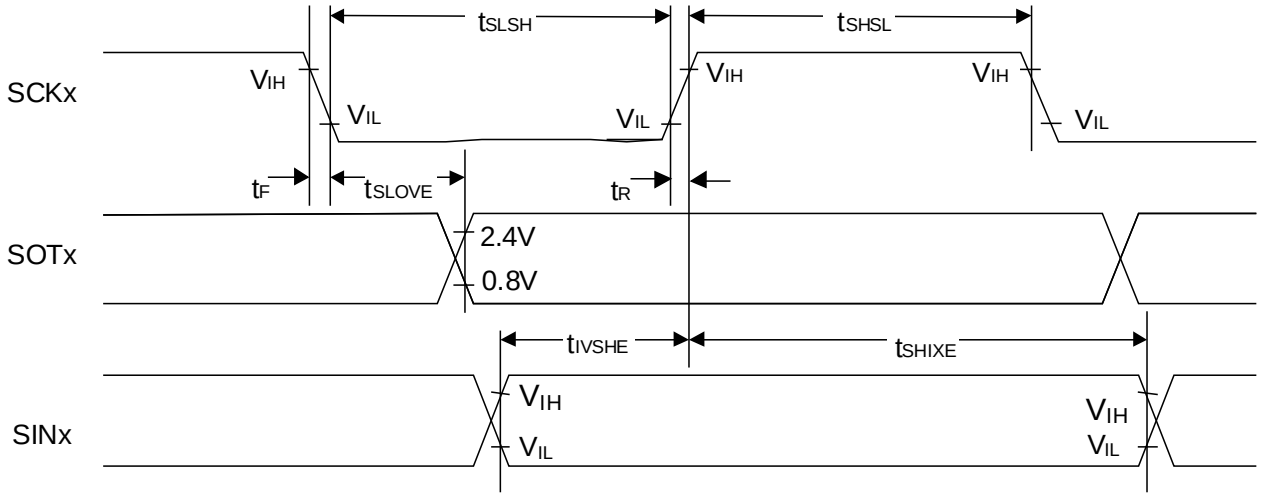

Bit setting: SMR: MD2 = 0, SMR: MD1 = 1, SMR: MD0 = 0, SMR: SCINV = 1, SCR: SPI = 0

(T_A: Recommended operating conditions, $V_{CC}5$ = 5.0V±10%, $V_{CC}E$ = 5.0V±10%, V_{SS} = AV_{SS} = 0.0V)

Parameter	Symbol	Pin name	Conditions	Value		Unit	Remarks
				Min	Max		
Serial clock cycle time	t_{SCYC}	SCK0, SCK1, SCK8, SCK9	—	$4t_{CPP}$	—	ns	Internal shift clock mode: C_L = 50pF (When drive capability is 2mA or more.) C_L = 20pF(When drive capability is 1mA)
SCK ↑ → SOT delay time	t_{SHOVI}	SCK0, SCK1, SCK8, SCK9, SOT0, SOT1, SOT8, SOT9		-30	+30	ns	
Valid SIN→ SCK ↓setup time	t_{IVSLI}	SCK0, SCK1, SCK8, SCK9, SIN0, SIN1, SIN8, SIN9		34	—	ns	
SCK ↓ → Valid SIN hold time	t_{SLIXI}			0	—	ns	
Serial clock "H" pulse width	t_{SHSL}	SCK0, SCK1, SCK8, SCK9	—	t_{CPP}+10	—	ns	External shift clock mode: C_L = 50pF (When drive capability is 2mA or more.) C_L = 20pF(When drive capability is 1mA)
Serial clock "L"pulse width	t_{SLSH}			$2t_{CPP}$-10	—	ns	
SCK ↑ → SOT delay time	t_{SHOVE}	SCK0, SCK1, SCK8, SCK9, SOT0, SOT1, SOT8, SOT9		—	33	ns	
Valid SIN→ SCK ↓setup time	t_{IVSLE}	SCK0, SCK1, SCK8, SCK9, SIN0, SIN1, SIN8, SIN9		10	—	ns	
SCK ↓ → Valid SIN hold time	t_{SLIXE}			20	—	ns	
SCK fall time	t_F	SCK0, SCK1, SCK8, SCK9		—	5	ns	
SCK rise time	t_R	SCK0, SCK1, SCK8, SCK9		—	5	ns	

Notes:

- AC characteristic in CLK synchronized mode.
- C_L is the load capacitance applied to pins during testing.
- The maximum baud rate is limited by the internal operation clock used and other parameters. Refer to Hardware Manual for details.

Internal shift clock mode

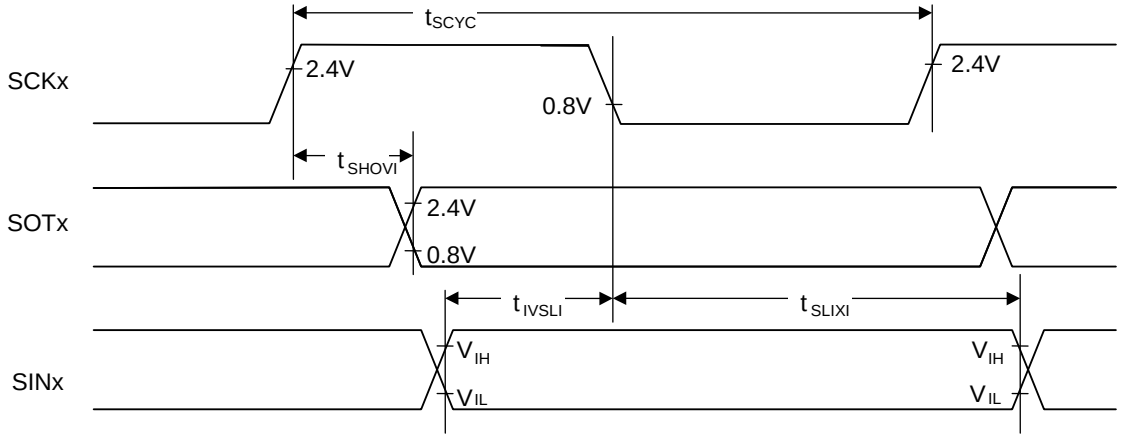

External shift clock mode

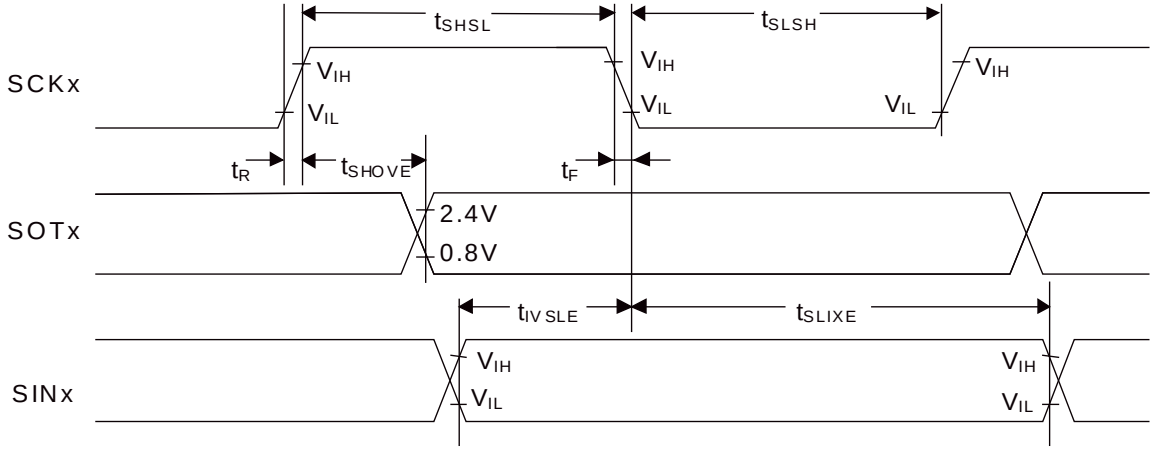

Bit setting: SMR: MD2 = 0, SMR: MD1 = 1, SMR: MD0 = 0, SMR: SCINV = 0, SCR: SPI = 1

(T_A: Recommended operating conditions, $V_{CC}5$ = 5.0V ± 10%, $V_{CC}E$ = 5.0V±10%, V_{SS} = AV_{SS} = 0.0V)

Parameter	Symbol	Pin name	Conditions	Value		Unit
				Min	Min	
Serial clock cycle time	t_{SCYC}	SCK0, SCK1, SCK8, SCK9	Internal shift clock mode C_L = 50pF (When drive capability is 2mA or more.) C_L = 20pF(When drive capability is 1mA)	$4t_{CPP}$	–	ns
SCK↑→SOT delay time	t_{SHOVI}	SCK0, SCK1, SCK8, SCK9, SOT0, SOT1, SOT8, SOT9		-30	+30	ns
Valid SIN→SCK↓ setup time	t_{IVSLI}	SCK0, SCK1, SCK8, SCK9, SIN0, SIN1, SIN8, SIN9		34	–	ns
SCK↓→ Valid SIN hold time	t_{SLIXI}			0	–	ns
SOT→SCK↓ delay time	t_{SOVLI}	SCK0, SCK1, SCK8, SCK9, SOT0, SOT1, SOT8, SOT9		$2t_{CPP}$-30	–	ns
Serial clock "H" pulse width	t_{SHSL}	SCK0, SCK1, SCK8, SCK9	External shift clock mode C_L = 50pF (When drive capability is 2mA or more.) C_L = 20pF(When drive capability is 1mA)	t_{CPP}+10	–	ns
Serial clock "L" pulse width	t_{SLSH}			$2t_{CPP}$-10	–	ns
SCK↑→SOT delay time	t_{SHOVE}	SCK0, SCK1, SCK8, SCK9, SOT0, SOT1, SOT8, SOT9		–	33	ns
Valid SIN→SCK↓ setup time	t_{IVSLE}	SCK0, SCK1, SCK8, SCK9, SIN0, SIN1, SIN8, SIN9		10	–	ns
SCK↓→ Valid SIN hold time	t_{SLIXE}			20	–	ns
SCK fall time	t_F	SCK0, SCK1, SCK8, SCK9		–	5	ns
SCK rise time	t_R	SCK0, SCK1, SCK8, SCK9		–	5	ns

Notes:

- AC characteristic in CLK synchronized mode.
- C_L is the load capacitance applied to pins during testing.
- The maximum baud rate is limited by internal operation clock used and other parameters. Refer to Hardware Manual for details.

・Internal shift clock mode

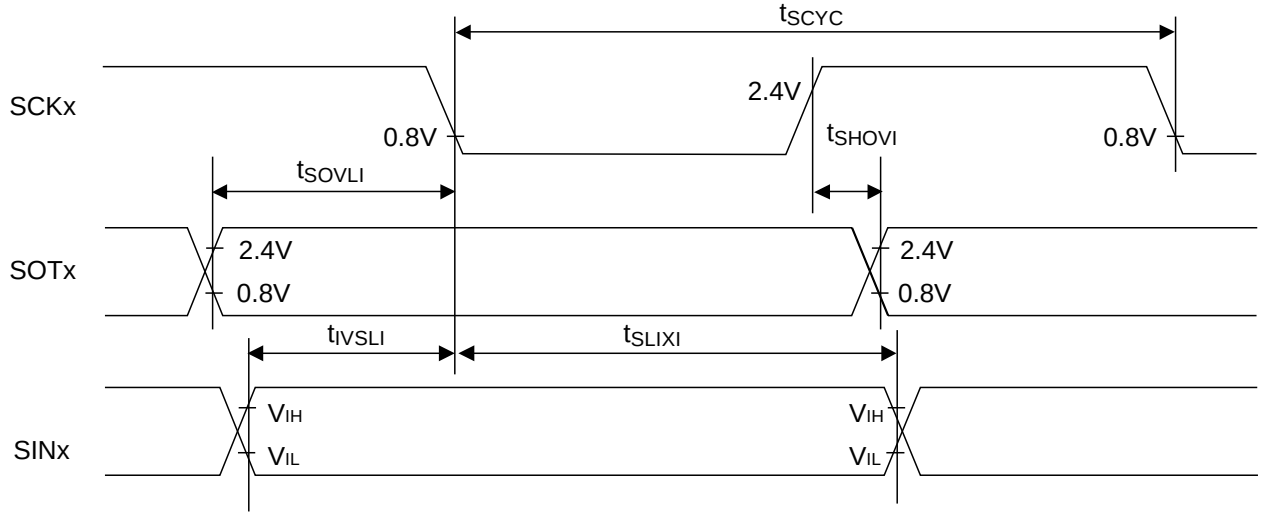

・External shift clock mode

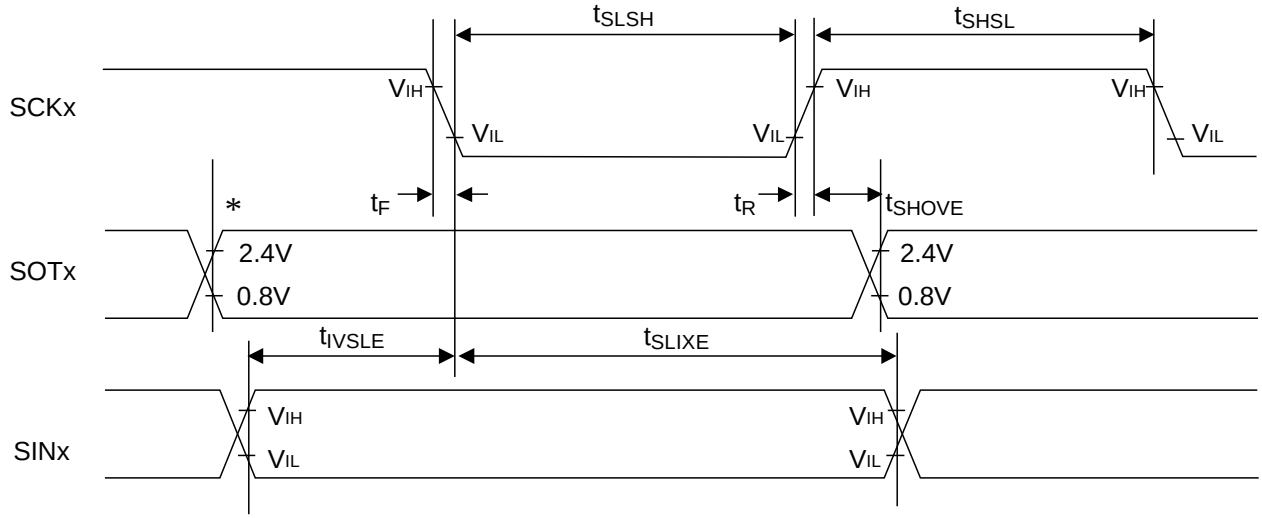

*: Changes when writing to TDR register

Bit setting: SMR: MD2 = 0, SMR: MD1 = 1, SMR: MD0 = 0, SMR: SCINV = 1, SCR: SPI = 1

(T_A: Recommended operating conditions, $V_{CC}5$ = 5.0V ± 10%, $V_{CC}E$ = 5.0V±10%, V_{SS} = AV_{SS} = 0.0V)

Parameter	Symbol	Pin name	Conditions	Value		Unit
				Min	Min	
Serial clock cycle time	t_{SCYC}	SCK0, SCK1, SCK8, SCK9	Internal shift clock mode C_L = 50pF (When drive capability is 2mA or more.) C_L = 20pF (When drive capability is 1mA)	$4t_{CPP}$	–	ns
SCK↓→SOT delay time	t_{SLOVI}	SCK0, SCK1, SCK8, SCK9, SOT0, SOT1, SOT8, SOT9		-30	+30	ns
Valid SIN→SCK↑ setup time	t_{IVSHI}	SCK0, SCK1, SCK8, SCK9, SIN0, SIN1, SIN8, SIN9		34	–	ns
SCK↑→ Valid SIN hold time	t_{SHIXI}			0	–	ns
SOT→SCK↑ delay time	t_{SOVHI}	SCK0, SCK1, SCK8, SCK9, SOT0, SOT1, SOT8, SOT9		$2t_{CPP}$-30	–	ns
Serial clock "H"pulse width	t_{SHSL}	SCK0, SCK1, SCK8, SCK9	External shift clock mode C_L = 50pF (When drive capability is 2mA or more.) C_L = 20pF (When drive capability is 1mA)	t_{CPP}+10	–	ns
Serial clock "L" pulse width	t_{SLSH}			$2t_{CPP}$-10	–	ns
SCK↓→SOT delay time	t_{SLOVE}	SCK0, SCK1, SCK8, SCK9, SOT0, SOT1, SOT8, SOT9		–	33	ns
Valid SIN→SCK↑ setup time	t_{IVSHE}	SCK0, SCK1, SCK8, SCK9, SIN0, SIN1, SIN8, SIN9		10	–	ns
SCK↑→ Valid SIN hold time	t_{SHIXE}			20	–	ns
SCK fall time	t_F	SCK0, SCK1, SCK8, SCK9		–	5	ns
SCK rise time	t_R	SCK0, SCK1, SCK8, SCK9		–	5	ns

Notes:

- AC characteristic in CLK synchronized mode.
- C_L is the load capacitance applied to pins during testing.
- The maximum baud rate is limited by internal operation clock used and other parameters. Refer to Hardware Manual for details.

・Internal shift clock mode

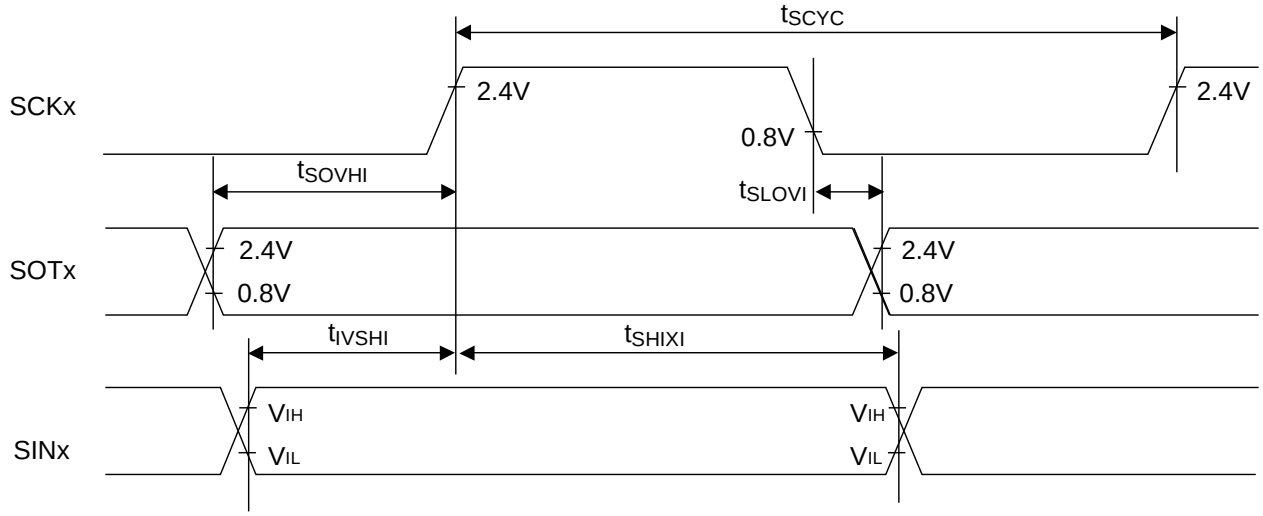

・External shift clock mode

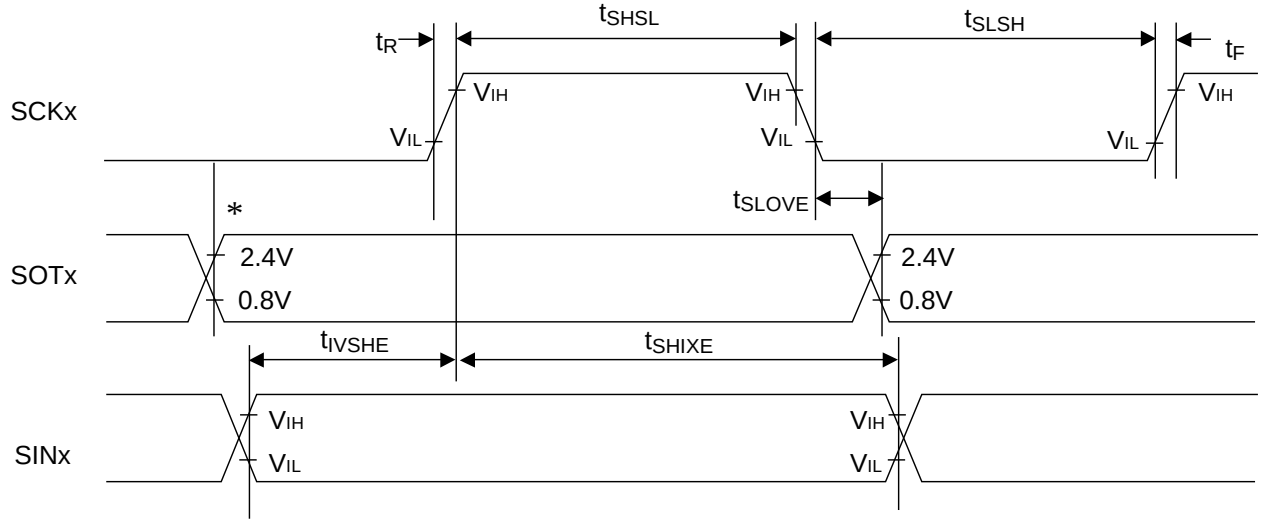

*: Changes when writing to TDR register

13.4.5.2 External clock (EXT = 1): asynchronous only

(T_A: Recommended operating conditions, $V_{CC}5$ = 5.0V±10%, $V_{CC}E$ = 5.0V±10%, V_{SS} = AV_{SS} = 0.0V)

Parameter	Symbol	Pin name	Conditions	Value		Unit
				Min	Max	
Serial clock "H" pulse width	t_{SHSL}	SCK0, SCK1, SCK8, SCK9	C_L=50pF (When drive capability is 2mA or more.) C_L=20pF (When drive capability is 1mA)	t_{CPP}+10	-	ns
Serial clock "L" pulse width	t_{SLSH}			t_{CPP}+10	-	ns
SCK fall time	t_F			-	5	ns
SCK rise time	t_R			-	5	ns

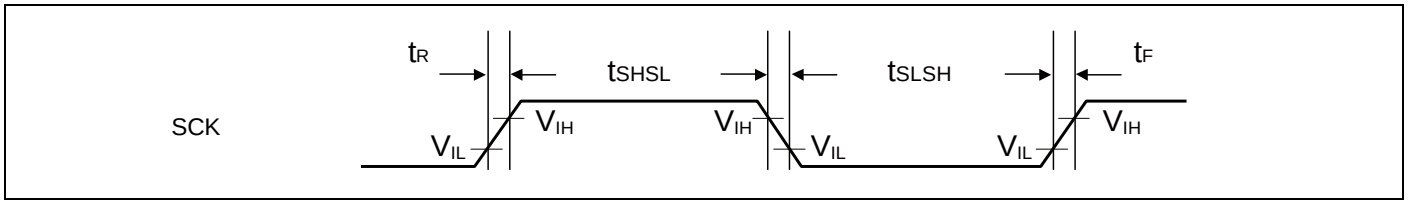

13.4.5.3 I^2C timing

(T_A: Recommended operating conditions, $V_{CC}5$ = 5.0V±10%, V_{SS} = AV_{SS} = 0.0V)

Parameter	Symbol	Pin name	Conditions	Standard mode		High-speed mode		Unit	Remarks
				Min	Max	Min	Max		
SCL clock frequency	f_{SCL}	SCK0_0, SCK1_0	C_L = 50 pF (When drive capability is 2mA or more.) C_L=20pF (When drive capability is 1mA) R = (V_P/I_{OL}) *1	0	100	0	400	kHz	
Repeat "start" condition hold time SDA ↓→ SCL ↓	t_{HDSTA}	SOT0_0, SOT1_0 (SDA) SCK0_0,SCK1_0 (SCL)		4.0	–	0.6	–	µs	
Width of "L" for SCL clock	t_{LOW}	SCK0_0, SCK1_0 (SCL)		4.7	–	1.3	–	µs	
Width of "H" for SCL clock	t_{HIGH}	SCK0_0, SCK1_0 (SCL)		4.0	–	0.6	–	µs	
Repeat "start" condition setup time SCL ↑→ SDA ↓	t_{SUSTA}	SCK0_0, SCK1_0 (SCL)		4.7	–	0.6	–	µs	
Data hold time SCL ↓→ SDA ↓↑	t_{HDDAT}	SOT0_0, SOT1_0 (SDA) SCK0_0, SCK1_0 (SCL)		0	3.45*2	0	0.9	µs	
Data setup time SDA ↓↑→ SCL ↑	t_{SUDAT}	SOT0_0, SOT1_0 (SDA) SCK0_0, SCK1_0 (SCL)		250*3	–	100	–	ns	
"Stop" condition setup time SCL ↑ →SDA ↑	t_{SUSTO}	SOT0_0, SOT1_0 (SDA) SCK0_0, SCK1_0 (SCL)		4.0	–	0.6	–	µs	
Bus-free time between "stop" condition and "start" condition	t_{BUF}	–		4.7	–	1.3	–	µs	
Noise filter	t_{SP}	–	–	$2t_{CPP}$*4	–	$2t_{CPP}$*4	–	ns	

*1: R and C_L represent the pull-up resistance and load capacitance of the SCL and SDA output lines, respectively.
V_P shows the power-supply voltage of the pull-up resistor and I_{OL} shows the V_{OL} guarantee current.

*2: The maximum t_{HDDAT} only has to be met if the device does not extend the "L" width (t_{LOW}) of the SCL signal.

*3: A high-speed mode I^2C bus device can be used on a standard mode I^2C bus system as long as the device satisfies the requirement of "t_{SUDAT} ≥ 250 ns".

*4: t_{CPP} is the peripheral clock cycle time. Adjust the peripheral bus clock to 8MHz or more when use I^2C.

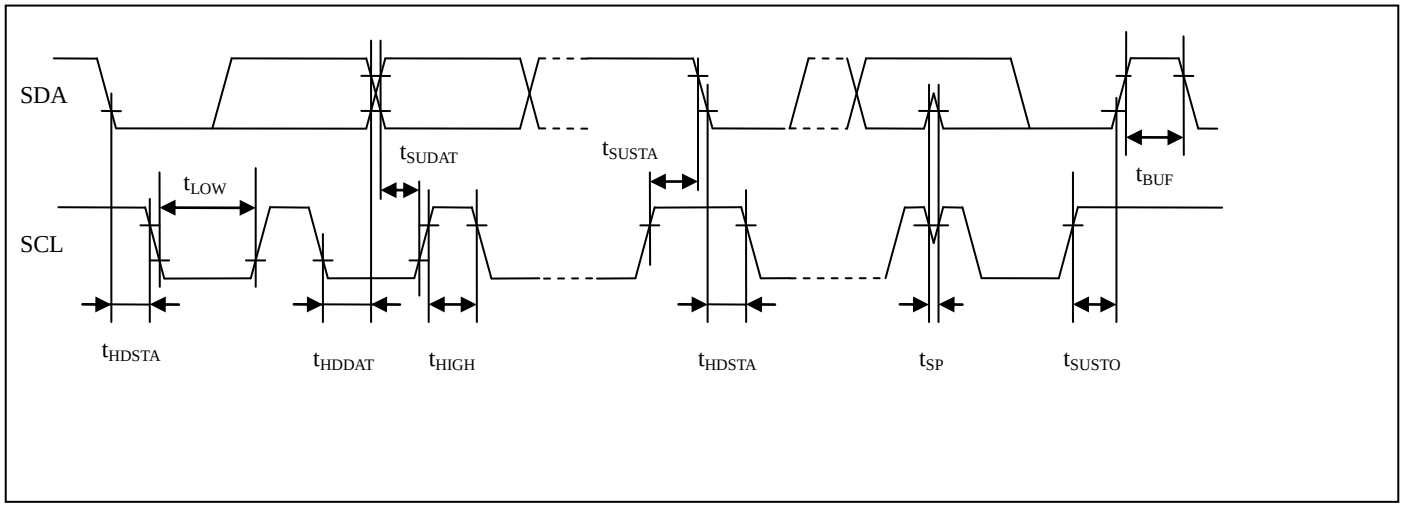
SDA
SCL
tLOW
tSUDAT
tSUSTA
tBUF
tHDSTA
tHDDAT
tHIGH
tHDSTA
tSP
tSUSTO

13.4.6 LIN-UART timing

Bit setting: ESCR: SCES = 0,ECCR: SCDE = 0

(T_A: Recommended operating conditions, $V_{CC}5$ = 5.0V±10%, $V_{CC}E$ = 5.0V±10%, V_{SS} = AV_{SS} = 0.0V)

Parameter	Symbol	Pin name	Conditions	Value		Unit	Remarks
				Min	Max		
Serial clock cycle time	t_{SCYC}	SCK2,SCK3, SCK4,SCK5, SCK6,SCK7	–	$5t_{CPP}$	–	ns	Internal shift clock mode: C_L=80pF+1 • TTL
SCK ↓ → SOT delay time	t_{SLOVI}	SCK2,SCK3, SCK4,SCK5, SCK6,SCK7, SOT2,SOT3, SOT4,SOT5, SOT6,SOT7		-50	+50	ns	
Valid SIN→ SCK ↑ setup time	t_{IVSHI}	SCK2,SCK3, SCK4,SCK5, SCK6,SCK7, SIN2,SIN3, SIN4,SIN5, SIN6,SIN7		t_{CPP}+80	–	ns	
SCK ↑ → Valid SIN hold time	t_{SHIXI}			0	–	ns	
Serial clock "L" pulse width	t_{SLSH}	SCK2,SCK3, SCK4,SCK5, SCK6,SCK7	–	$3t_{CPP}$-t_R	–	ns	External shift clock mode: C_L=80pF+1 • TTL
Serial clock "H" pulse width	t_{SHSL}			t_{CPP}+10	–	ns	
SCK ↓→ SOT delay time	t_{SLOVE}	SCK2,SCK3, SCK4,SCK5, SCK6,SCK7, SOT2,SOT3, SOT4,SOT5, SOT6,SOT7		–	$2t_{CPP}$+60	ns	
Valid SIN→ SCK ↑ setup time	t_{IVSHE}	SCK2,SCK3, SCK4,SCK5, SCK6,SCK7, SIN2,SIN3, SIN4,SIN5, SIN6,SIN7		30	–	ns	
SCK ↑ → Valid SIN hold time	t_{SHIXE}			t_{CPP}+30	–	ns	
SCK fall time	t_F	SCK2,SCK3, SCK4,SCK5, SCK6,SCK7		–	10	ns	
SCK rise time	t_R			–	40	ns	

Notes:

- C_L is the load capacitance applied to pins during testing.
- The maximum baud rate is limited by the internal operation clock used and other parameters. Refer to Hardware Manual for details.

Internal shift clock mode

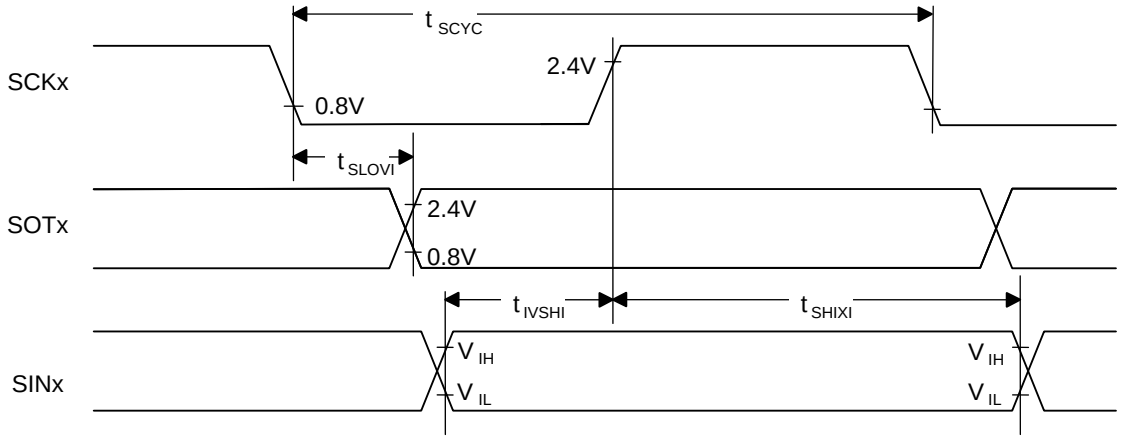

External shift clock mode

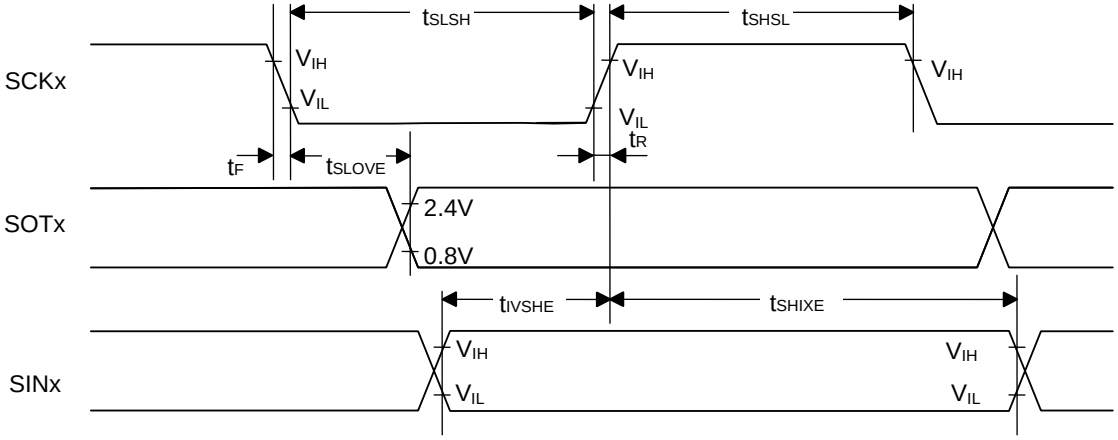

Bit setting: ESCR: SCES=1, ECCR: SCDE=0

(T_A: Recommended operating conditions, $V_{CC}5$ = 5.0V±10%, $V_{CC}E$ = 5.0V±10%, V_{SS} = AV_{SS} = 0.0V)

Parameter	Symbol	Pin name	Conditions	Value		Unit	Remarks
				Min	Max		
Serial clock cycle time	t_{SCYC}	SCK2,SCK3, SCK4,SCK5, SCK6,SCK7	–	$5t_{CPP}$	–	ns	Internal shift clock mode: C_L=80pF+1 • TTL
SCK ↑→ SOT delay time	t_{SHOVI}	SCK2,SCK3, SCK4,SCK5, SCK6,SCK7, SOT2,SOT3, SOT4,SOT5, SOT6,SOT7		-50	+50	ns	
Valid SIN→ SCK ↓setup time	t_{IVSLI}	SCK2,SCK3,SCK4, SCK5,SCK6,SCK7, SIN2,SIN3, SIN4,SIN5, SIN6,SIN7		t_{CPP}+80	–	ns	
SCK ↓→ Valid SIN hold time	t_{SLIXI}			0	–	ns	
Serial clock "H" pulse width	t_{SHSL}	SCK2,SCK3, SCK4,SCK5, SCK6,SCK7	–	$3t_{CPP}$-t_R	–	ns	External shift clock mode: C_L=80pF+1 •TTL
Serial clock "L" pulse width	t_{SLSH}			t_{CPP}+10	–	ns	
SCK ↑→ SOT delay time	t_{SHOVE}	SCK2,SCK3, SCK4,SCK5, SCK6,SCK7, SOT2,SOT3, SOT4,SOT5, SOT6,SOT7		–	$2t_{CPP}$+60	ns	
Valid SIN → SCK ↓setup time	t_{IVSLE}	SCK2,SCK3, SCK4,SCK5, SCK6,SCK7, SIN2,SIN3, SIN4,SIN5, SIN6,SIN7		30	–	ns	
SCK ↓→ Valid SIN hold time	t_{SLIXE}			t_{CPP}+30	–	ns	
SCK fall time	t_F	SCK2,SCK3, SCK4,SCK5, SCK6,SCK7		–	10	ns	
SCK rise time	t_R			–	40	ns	

Notes:

- C_L is the load capacitance applied to pins during testing.
- The maximum baud rate is limited by the internal operation clock used and other parameters. Refer to Hardware Manual for details.

Internal shift clock mode

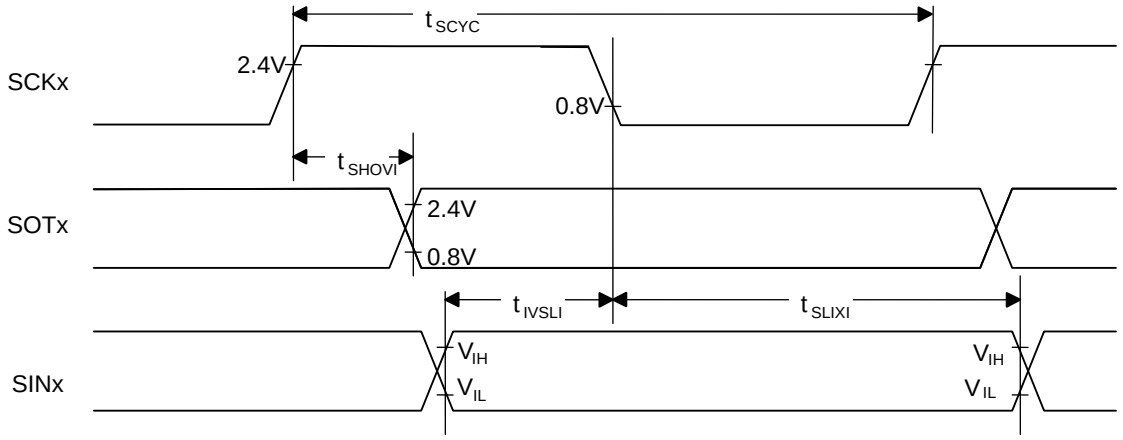

External shift clock mode

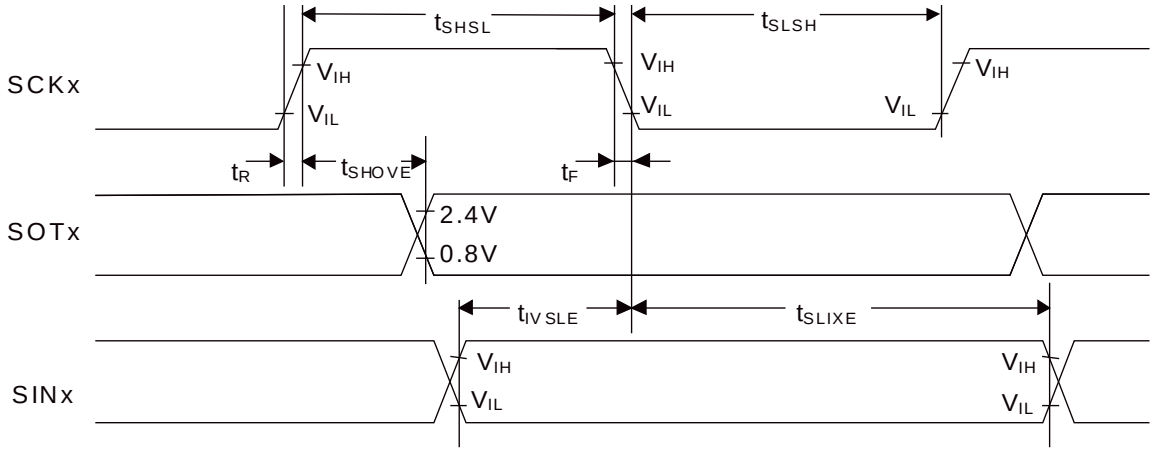

Bit setting: ESCR: SCES = 0, ECCR: SCDE = 1

(T_A: Recommended operating conditions, $V_{CC}5$ = 5.0V±10%, $V_{CC}E$ = 5.0V±10%, V_{SS} = AV_{SS} = 0.0V)

Parameter	Symbol	Pin name	Conditions	Value		Unit	Remarks
				Min	Max		
Serial clock cycle time	t_{SCYC}	SCK2,SCK3, SCK4,SCK5, SCK6,SCK7	–	$5t_{CPP}$	–	ns	Internal shift clock mode: C_L=80pF+1 • TTL
SCK ↑→ SOT delay time	t_{SHOVI}	SCK2,SCK3, SCK4,SCK5, SCK6,SCK7, SOT2,SOT3, SOT4,SOT5, SOT6,SOT7		-50	+50	ns	
Valid SIN → SCK ↓setup time	t_{IVSLI}	SCK2,SCK3,SCK4, SCK5,SCK6,SCK7, SIN2,SIN3, SIN4,SIN5, SIN6,SIN7		t_{CPP}+80	–	ns	
SCK ↓→ Valid SIN hold time	t_{SLIXI}			0	–	ns	
SOT → SCK ↓ delay time	t_{SOVLI}	SCK2,SCK3, SCK4,SCK5, SCK6,SCK7, SOT2,SOT3, SOT4,SOT5, SOT6,SOT7		$3t_{CPP}$-70	–	ns	

Notes:

- C_L is the load capacitance applied to pins during testing.
- The maximum baud rate is limited by the internal operation clock used and other parameters. Refer to Hardware Manual for details.

Internal shift clock mode

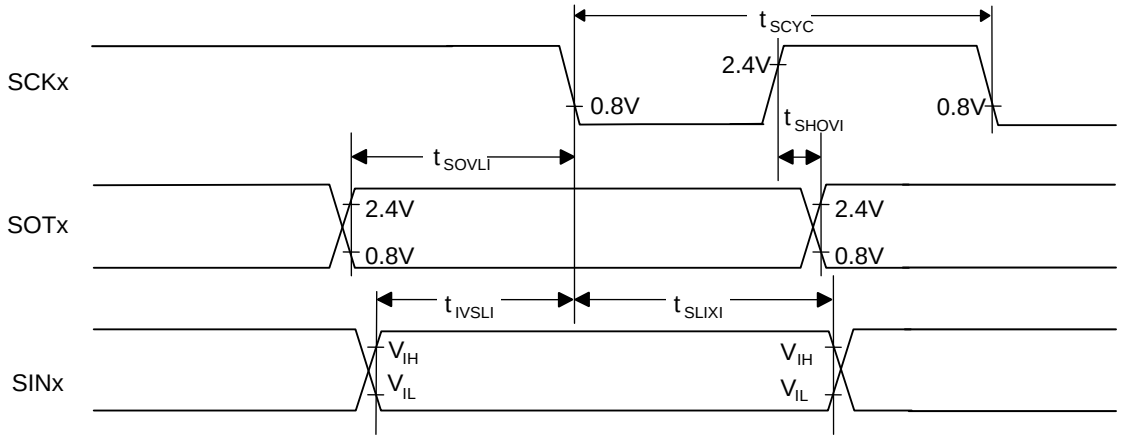

Bit setting: ESCR: SCES = 1, ECCR: SCDE = 1

(T_A: Recommended operating conditions, $V_{CC}5$ = 5.0V±10%, $V_{CC}E$ = 5.0V±10%, V_{SS} = AV_{SS} = 0.0V)

Parameter	Symbol	Pin name	Conditions	Value		Unit	Remarks
				Min	Max		
Serial clock cycle time	t_{SCYC}	SCK2,SCK3, SCK4,SCK5, SCK6,SCK7	–	$5t_{CPP}$	–	ns	Internal shift clock Mode: C_L=80pF+1 • TTL
SCK ↓→ SOT delay time	t_{SLOVI}	SCK2,SCK3, SCK4,SCK5, SCK6,SCK7, SOT2,SOT3, SOT4,SOT5, SOT6,SOT7		-50	+50	ns	
Valid SIN→ SCK ↑ setup time	t_{IVSHI}	SCK2,SCK3, SCK4,SCK5, SCK6,SCK7, SIN2,SIN3, SIN4,SIN5, SIN6,SIN7		t_{CPP}+80	–	ns	
SCK ↑→ Valid SIN hold time	t_{SHIXI}			0	–	ns	
SOT → SCK ↑ delay time	t_{SOVHI}	SCK2,SCK3, SCK4,SCK5, SCK6,SCK7, SOT2,SOT3, SOT4,SOT5, SOT6,SOT7		$3t_{CPP}$-70	–	ns	

Notes:

- C_L is the load capacitance applied to pins during testing.
- The maximum baud rate is limited by the internal operation clock used and other parameters. Refer to Hardware Manual for details.

Internal shift clock mode

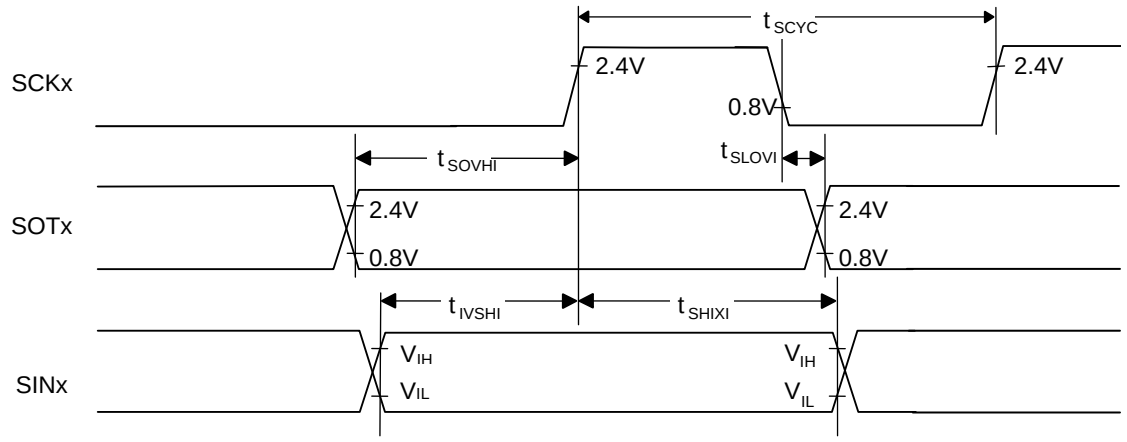

13.4.7 Timer input timing

(T_A: Recommended operating conditions, $V_{CC}5$ = 5.0V±10%, $V_{CC}E$ = 5.0V±10%, V_{SS} = AV_{SS} = 0.0V)

Parameter	Symbol	Pin name	Conditions	Value		Unit
				Min	Max	
Input pulse width	t_{TIWH}, t_{TIWL}	TIN0, TIN1, TIN2, TIN3, ICU0 to ICU11, FRCK0 to FRCK5, TIOA, TIOB, AIN0, BIN0, ZIN0 , AIN1, BIN1, ZIN1	–	$4t_{CPP}$	–	ns

Timer input timing

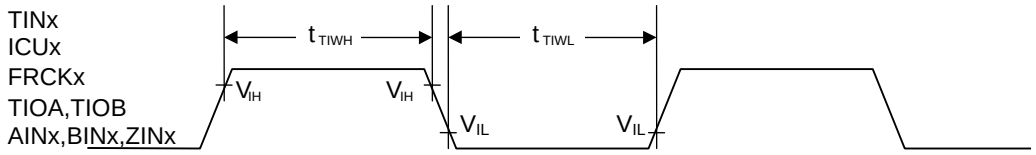

13.4.8 Trigger input timing

(T_A: Recommended operating conditions, $V_{CC}5$ = 5.0V±10%, $V_{CC}E$ = 5.0V±10%, V_{SS} = AV_{SS} = 0.0V)

Parameter	Symbol	Pin name	Conditions	Value		Unit	Remarks
				Min	Max		
Input pulse width	t_{TRGH}, t_{TRGL}	INT0 to INT15, ADTG, RX0 to RX2	–	$5t_{CPP}$	–	ns	
				1	–	µs	In stop mode

Trigger input timing

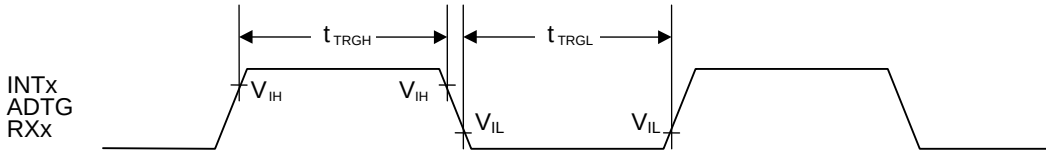

13.4.9 NMI input timing

(T_A: Recommended operating conditions, $V_{CC}5$ = 5.0V±10%, V_{SS} = AV_{SS} = 0.0V)

Parameter	Symbol	Pin name	Conditions	Value		Unit
				Min	Max	
Input pulse width	t_{NMIL}	NMIX	–	$4t_{CPP}$	–	ns

NMIX input timing

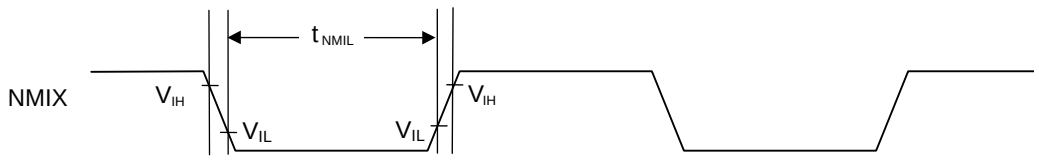

13.4.10 Low voltage detection (External low-voltage detection)

(T_A: Recommended operating conditions, V_{SS} = AV_{SS} = 0.0V)

Parameter	Symbol	Pin name	Conditions	Value			Unit	Remarks
				Min	Typ	Max		
Power supply voltage range	$V_{CC}5$	$V_{CC}5$	–	–	–	5.5	V	
Detection voltage	V_{DL}	$V_{CC}5$	*1	3.9	4.1	4.3	V	When power-supply voltage falls and detection level is set initially
Hysteresis width	V_{HYS}	$V_{CC}5$	–	–	–	125	mV	When power-supply voltage rises
Low voltage detection time	Td	–	–	–	–	30	µs	
Power supply voltage fluctuation rate	–	$V_{CC}5$	–	-2	–	2	V/ms	*2

*1: If the power supply voltage fluctuates within the time less than the low-voltage detection time (Td), there is a possibility that the low-voltage detection will occur or stop after the power supply voltage passes the detection range.

*2: In order to perform the low-voltage detection at the detection voltage (V_{DL}), be sure to suppress fluctuation of the power supply voltage within the limits of the power supply voltage fluctuation rate.

13.4.11 Low voltage detection (Internal low-voltage detection)

(T_A: Recommended operating conditions, V_{SS} = AV_{SS} = 0.0V)

Parameter	Symbol	Pin name	Conditions	Value			Unit	Remarks
				Min	Typ	Max		
Power supply voltage range	V_{RDP5}	V_{CC}	–	–	–	1.3	V	
Detection voltage	V_{RDL}		*	0.8	0.9	1.0	V	When power-supply voltage falls
Hysteresis width	V_{RHYS}		–	–	–	50	mV	When power-supply voltage rises
Low voltage detection time	Td	–	–	–	–	30	µs	

*: If the fluctuation of the power supply is faster than the low voltage detection time (Td), there is a possibility to generate or release after the power supply voltage has exceeded the detection voltage range.

13.4.12 High current output slew rate

(T_A: Recommended operating conditions, $DV_{CC}5$ = AV_{CC} = 5.0V±10%, V_{SS} = AV_{SS} = 0.0V)

Parameter	Symbol	Pin name	Conditions	Value			Unit	Remarks
				Min	Typ	Max		
Output rise /fall time	t_{R2}, t_{F2}	P060 to P067, P070 to P077, P080 to P087	–	15	–	100	ns	load capacitance 85pF

Slew rate output timing

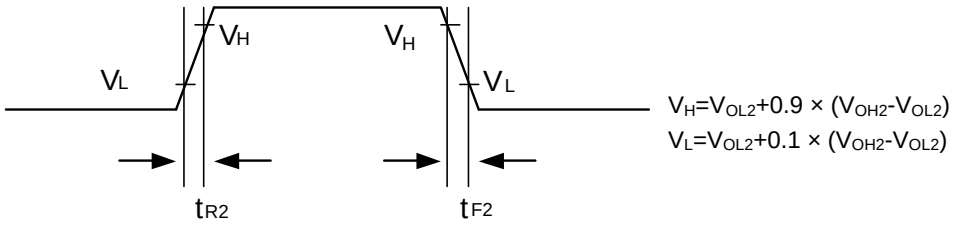

13.4.13 Clock output timing

(T_A: Recommended operating conditions, $V_{CC}5 = V_{CC}E = AV_{CC} = 5.0V \pm 10\%$, $V_{SS} = AV_{SS} = 0.0V$)

Parameter	Symbol	Pin name	Conditions	Value		Unit	Remarks
				Min	Max		
Cycle time	t_{CYC}	SYSCLK	–	t_{CPT}	–	ns	
SYSCLK ↑→ SYSCLK ↓	t_{CHCL}	SYSCLK		(1/2 t_{CYC}) - 7	(1/2 t_{CYC}) + 7	ns	
SYSCLK ↓→ SYSCLK ↑	t_{CLCH}	SYSCLK		(1/2 t_{CYC}) - 7	(1/2 t_{CYC}) + 7	ns	

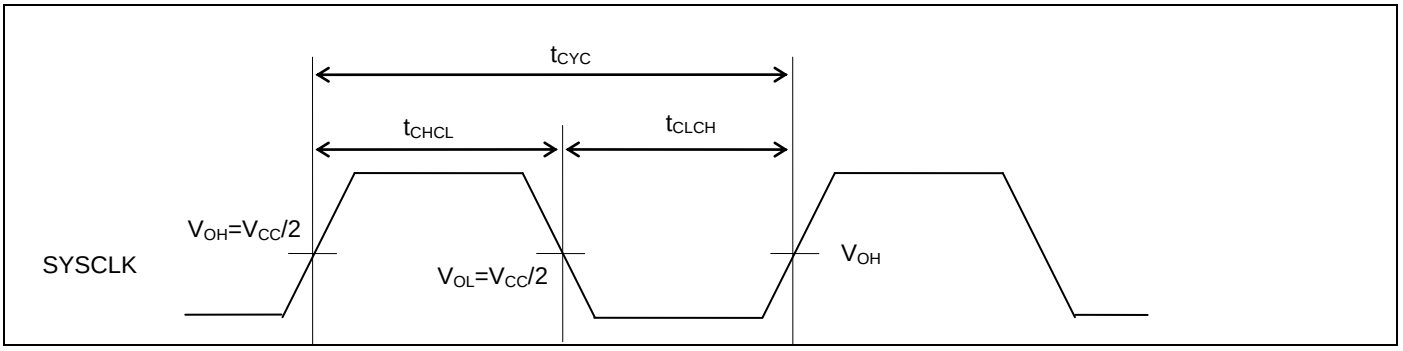

13.4.14 External bus I/F (synchronous mode) timing

(T_A: Recommended operating conditions, $V_{CC}5 = V_{CC}E = AV_{CC} = 5.0V±10\%$, $V_{SS} = AV_{SS} = 0.0V$)
(External load capacitance 50pF)

Parameter	Symbol	Pin name	Value		Unit	Remarks
			Min	Max		
Cycle time	t_{CYC}	SYSCLK	25	–	ns	
ASX delay time	t_{CHASL}, t_{CHASH}	SYSCLK, ASX	0.5	18	ns	
CS0X to CS3X delay time	t_{CHCSL}, t_{CHCSH}	SYSCLK, CS0X to CS3X	0.5	18	ns	
A00 to A21 delay time	t_{CHAV}, t_{CHAX}	SYSCLK, A00 to A21	0.5	18	ns	
RDX delay time	t_{CHRL}, t_{CHRH}	SYSCLK, RDX	0.5	18	ns	
RDX minimum pulse	t_{RLRH}	RDX	t_{CYC}× 2 - 20	–	ns	RWT=1, set RWT to 1 or more. *
Data setup → RDX ↑ time	t_{DSRH}	RDX, D16 to D31	18 + t_{CYC}	–	ns	RWT=1, set RWT to 1 or more. *
RDX ↑→ data hold	t_{RHDH}		0	–	ns	
WRnX delay time	t_{CHWL}, t_{CHWH}	SYSCLK, WR0X, WR1X	0.5	18	ns	
WRnX minimum pulse width	t_{WLWH}	WR0X, WR1X	t_{CYC} - 10	–	ns	WWT=0 *
SYSCLK ↑→ data output time	t_{CHDV}	SYSCLK, D16 to D31	0.5	18	ns	
SYSCLK ↑→ data hold time	t_{CHDX}		–	18	ns	Set WRCS to 1 or more.
SYSCLK ↑→ address output time	t_{CHMAV}	SYSCLK, D16 to D31	0.5	18	ns	
SYSCLK ↑→ address hold time	t_{CHMAX}		–	18	ns	In multiplex mode, set as follows: Set CSWR and CSRD to 2 or more. ASCY must satisfy the following conditions because of setting ADCY>ASCY and protocol violation prevention. ADCY + 1 ≤ ACS + CSRD ADCY + 1 ≤ ACS + CSWR ASCY + 1 ≤ ACS + CSRD ASCY + 1 ≤ ACS + CSWR Refer to Hardware Manual for details.

*: If the bus is expanded by automatic wait insertion or RDY input, add time (t_{CYC} × the number of expanded cycles) to the rated value.

External bus I/F (synchronous mode, read operation, and multiplex mode) timing

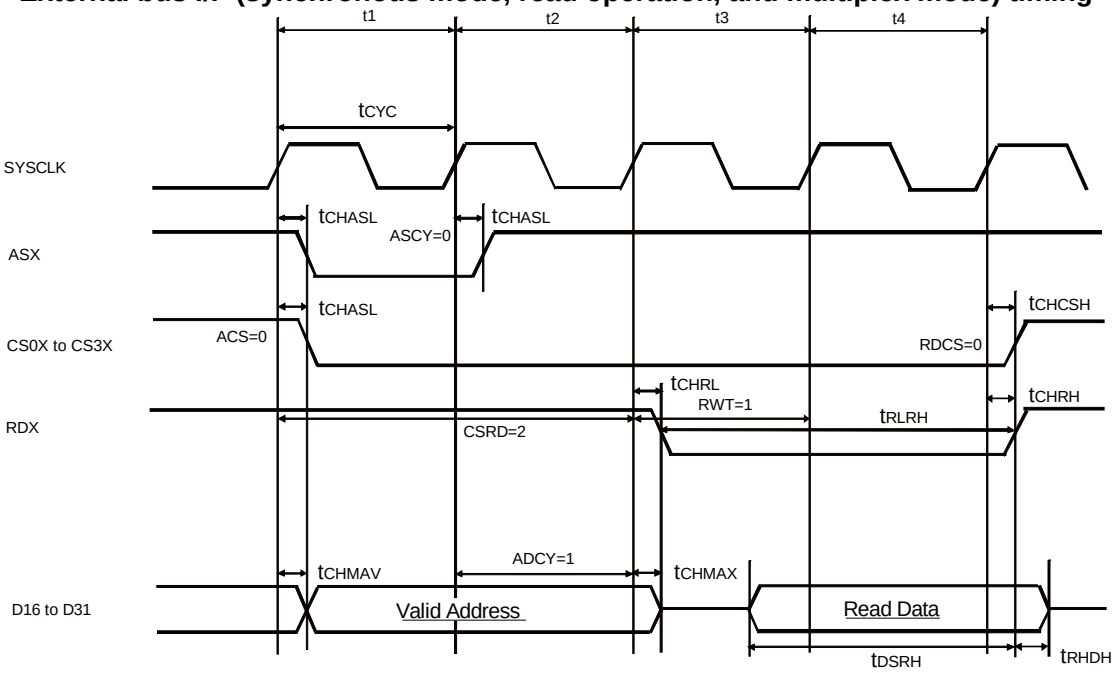

External bus I/F (synchronous mode, read operation, and split mode) timing

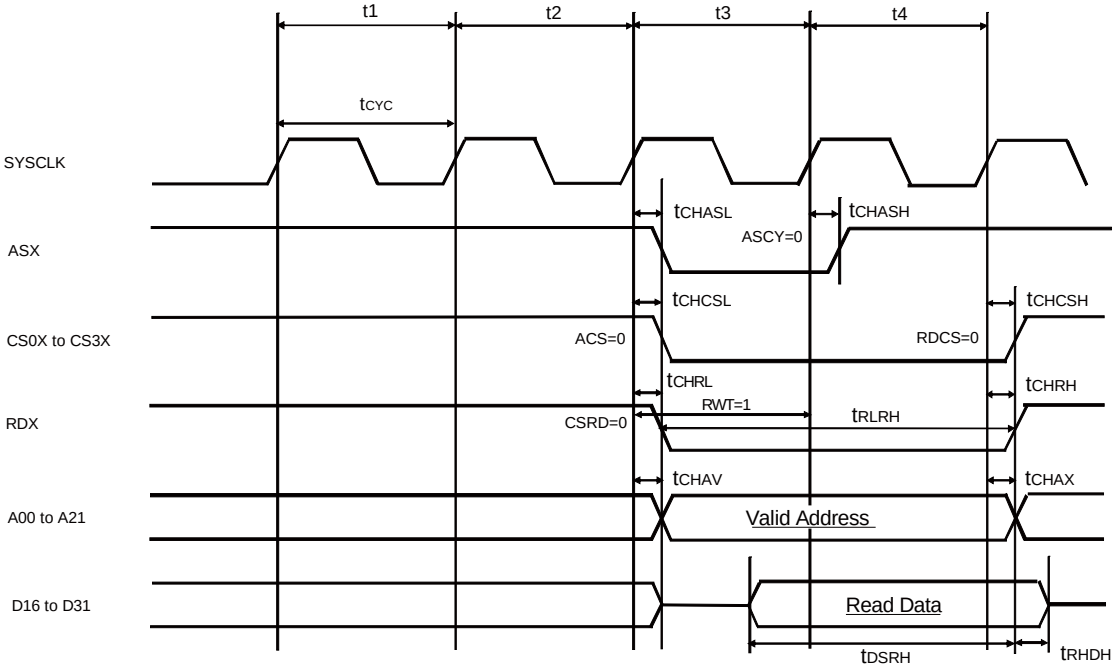

External bus I/F (synchronous mode, write operation, and multiplex mode) timing

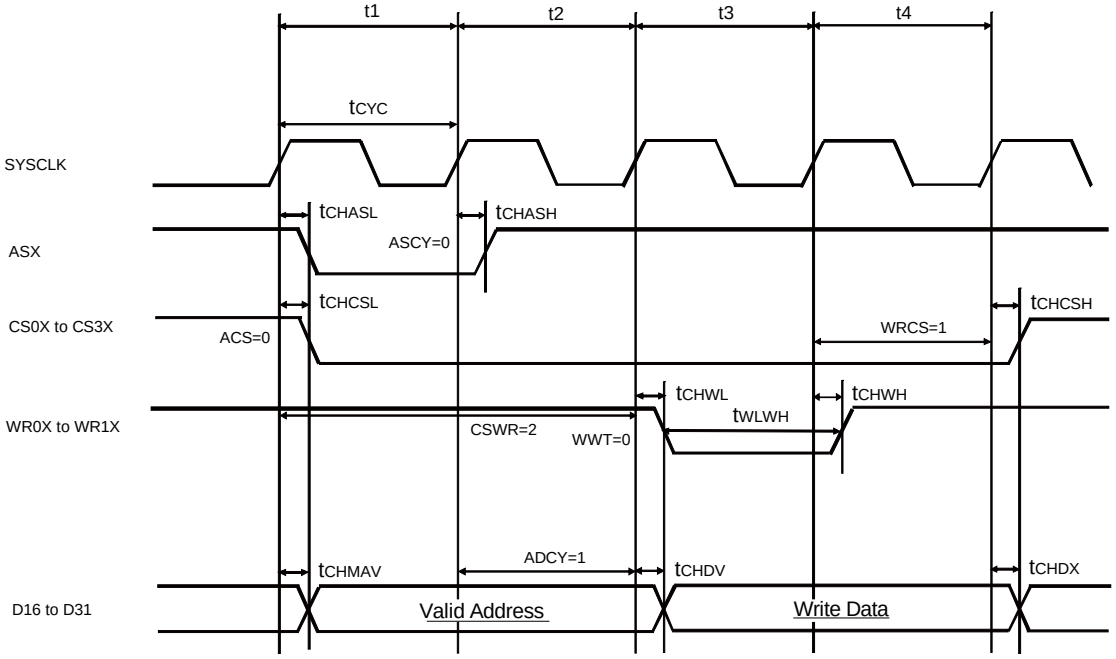

External bus I/F (synchronous mode, write operation, and split mode) timing

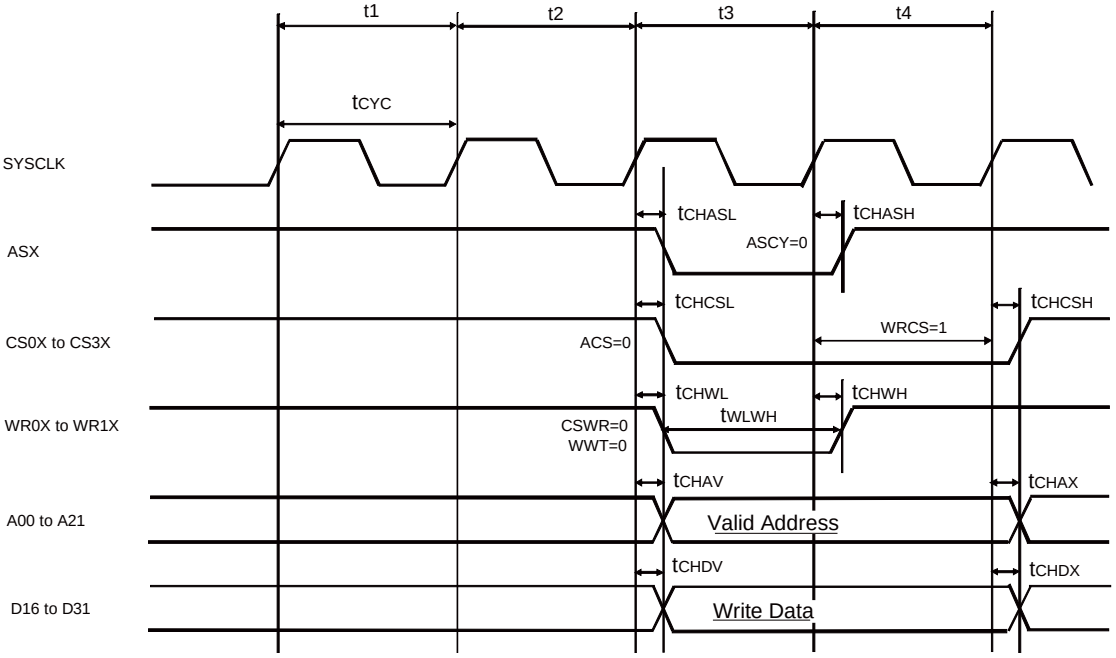

13.4.15 External bus I/F (Asynchronous mode) timing

(T_A: Recommended operating conditions, $V_{CC}5 = V_{CC}E = AV_{CC} = 5.0V \pm 10\%$, $V_{SS} = AV_{SS} = 0.0V$)
(External load capacitance 50pF)

Parameter	Symbol	Pin name	Value		Unit	Remarks
			Min	Max		
Cycle time	t_{CYC}	SYSCLK	25	–	ns	
Address setup → RDX↑time	t_{ASRH}	RDX, A00 to A21	$2 \times t_{CYC} - 12$	$2 \times t_{CYC} + 12$	ns	RWT=1, Set RWT to “1” or more. *
RDX ↑→ Address hold	t_{RHAH}		$t_{CYC} - 12$	$t_{CYC} + 12$	ns	Set RDCS to “1” or more.
Data setup → RDX↑time	t_{DSRH}	RDX, D16 to D31	18 + t_{CYC}	–	ns	RWT=1, Set RWT to “1” or more.
RDX ↑ → Data hold	t_{RHDH}		0	–	ns	
Address setup → WRnX↑time	t_{ASWH}	WR0X to WR1X, A00 to A21	$t_{CYC} - 12$	$t_{CYC} + 12$	ns	WWT=0 *
WRnX ↑→ Address hold	t_{WHAH}		$t_{CYC} - 12$	$t_{CYC} + 12$	ns	Set WRCS to “1” or more.
Data setup → WRnX ↑ time	t_{DSWH}	WR0X to WR1X, D16 to D31	$t_{CYC} - 16$	$t_{CYC} + 16$	ns	WWT=0 *
WRnX ↑→ Data hold	t_{WHDH}		$t_{CYC} - 16$	$t_{CYC} + 16$	ns	Set WRCS to “1” or more.
Address setup → ASX↑time	t_{MASASH}	ASX, D16 to D31	$t_{CYC} - 16$	$t_{CYC} + 16$	ns	ASCY=0
ASX ↑→ Address hold	t_{MASHAH}		$t_{CYC} - 16$	$t_{CYC} + 16$	ns	In multiplex mode, set as follows: Set CSWR and CSRD to 2 or more. ASCY must satisfy the following conditions because of setting ADCY>ASCY and protocol violation prevention. ADCY + 1 ≤ ACS + CSRD ADCY + 1 ≤ ACS + CSWR ASCY + 1 ≤ ACS + CSRD ASCY + 1 ≤ ACS + CSWR Refer to Hardware Manual for details.

*: If the bus is expanded by automatic wait insertion or RDY input, add time (t_{CYC} × the number of expanded cycles) to the rated value.

External bus I/F (asynchronous mode, read operation, and multiplex mode) timing

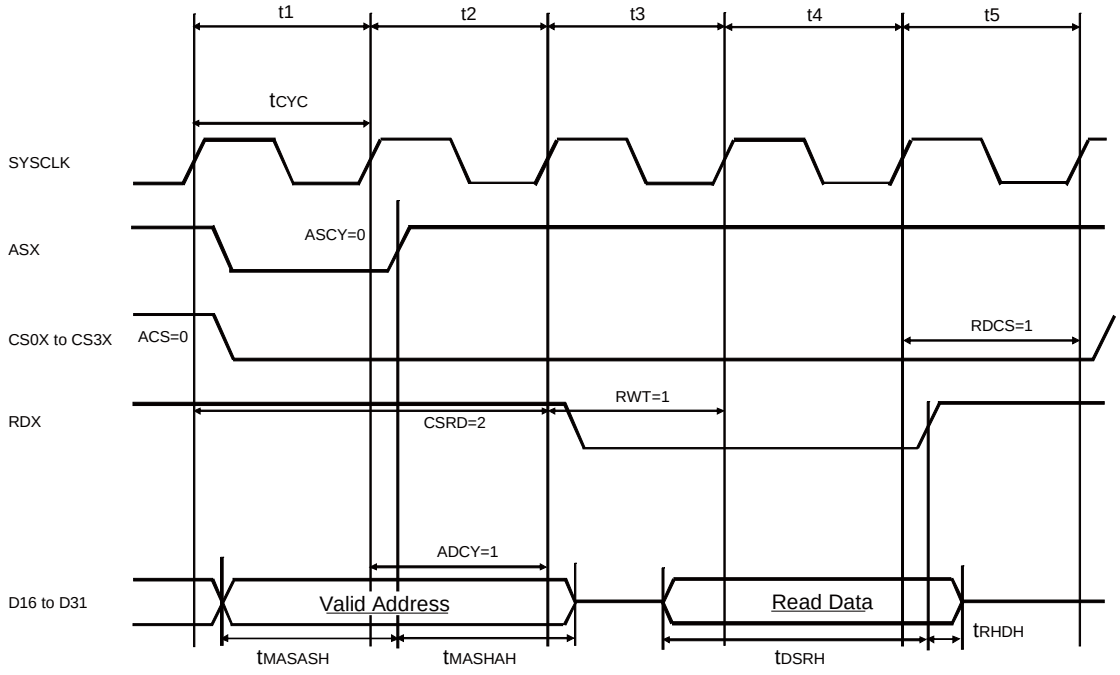

External bus I/F (asynchronous mode, read operation, and split mode) Timing

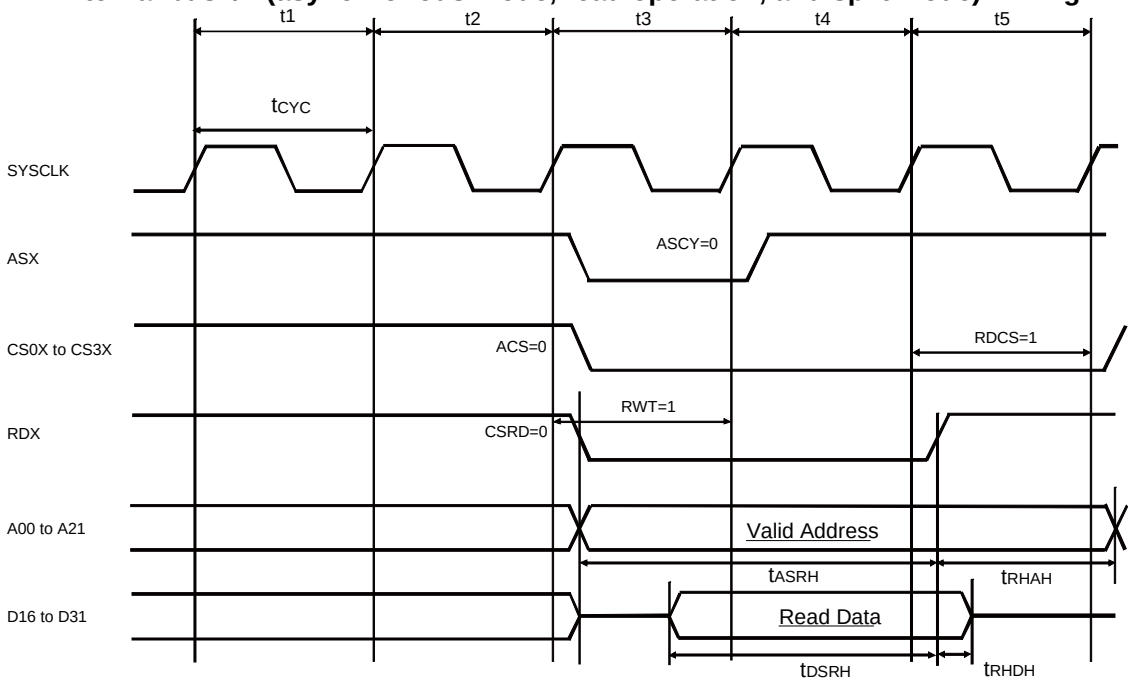

External bus I/F (asynchronous mode, write operation, and multiplex mode) timing

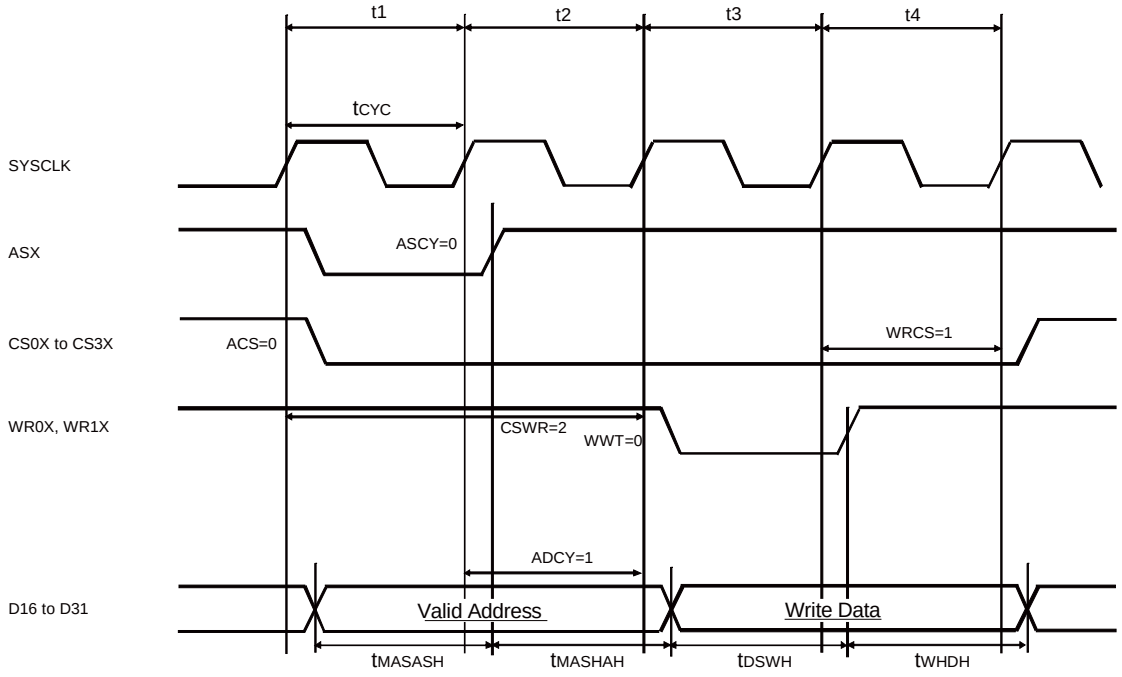

External bus I/F (Asynchronous mode, write operation, and split mode) timing

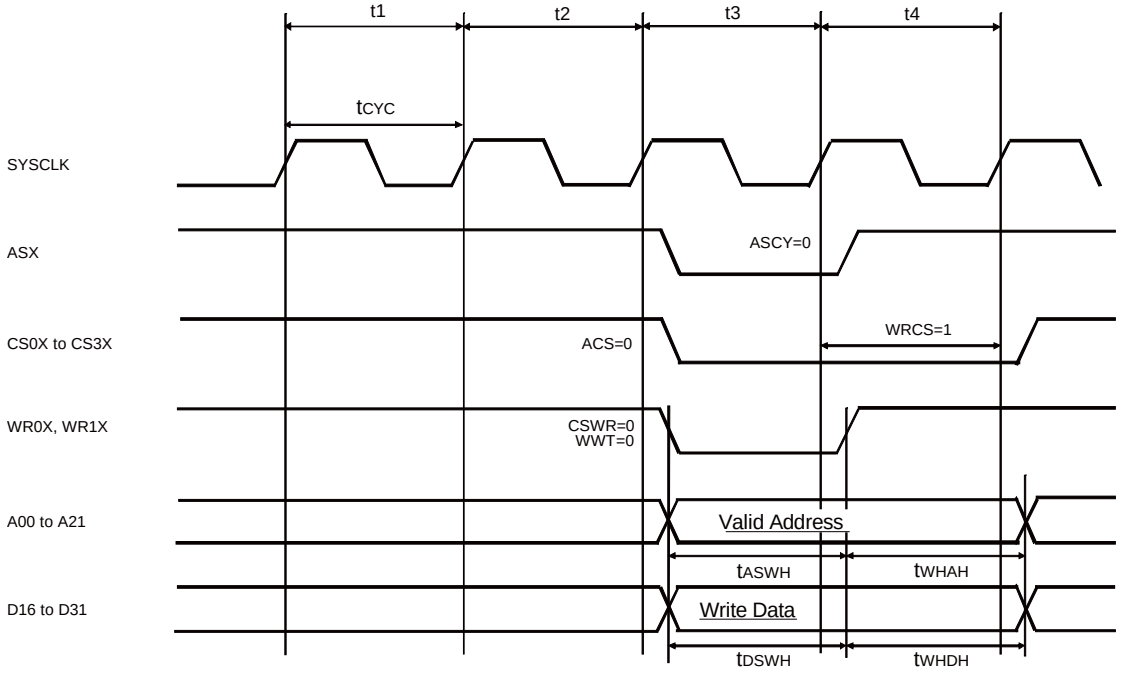

13.4.16 External bus I/F (ready) timing

(T_A: Recommended operating conditions, $V_{CC}5 = V_{CC}E = AV_{CC} = 5.0V \pm 10\%$, $V_{SS} = AV_{SS} = 0.0V$)
(External load capacitance 50pF)

Parameter	Symbol	Pin name	Value		Unit	Remarks
			Min	Max		
Cycle time	t_{CYC}	SYSCLK	50	–	ns	If using RDY, set SYSCLK to 20 MHz or less.
RDY setup time→ SYSCLK ↑	t_{RDYS}	SYSCLK, RDY	28	–	ns	
SYSCLK ↑→ RDY hold time	t_{RDYH}	SYSCLK, RDY	0	–	ns	

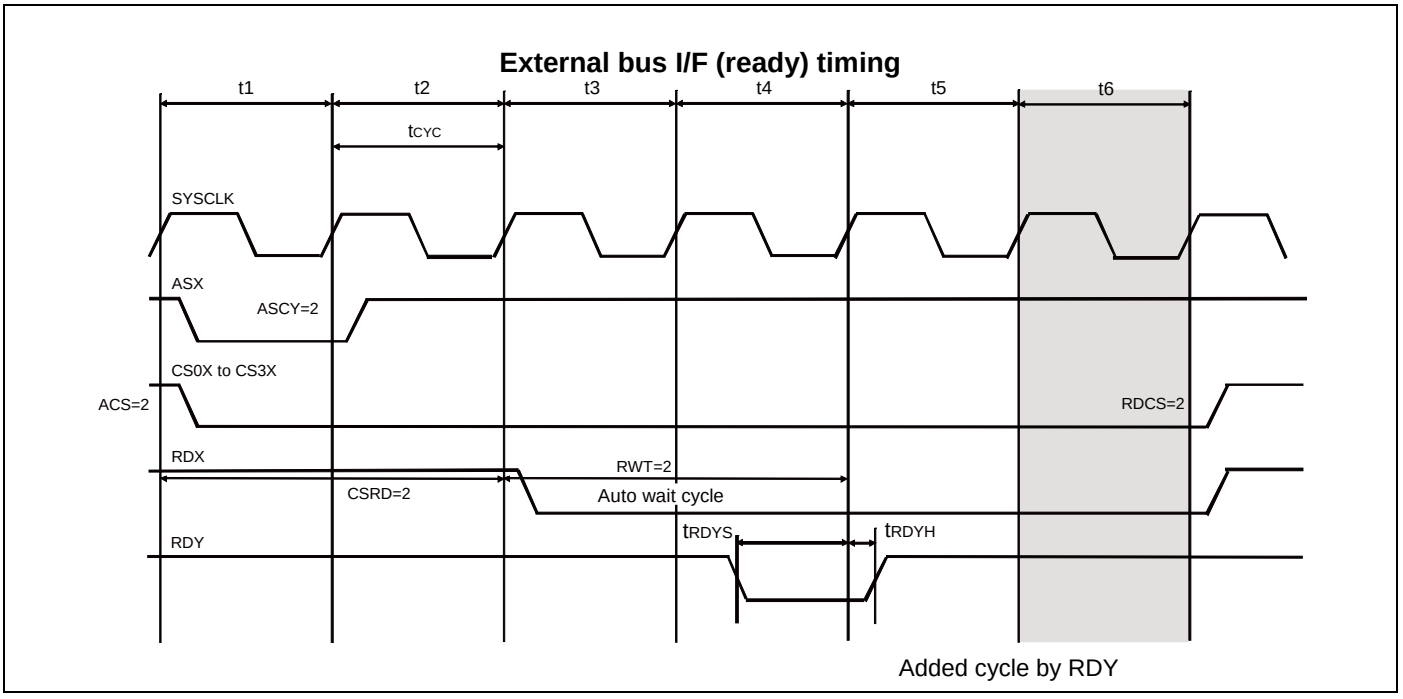

13.4.17 HS-SPI timing

(T_A: Recommended operating conditions, $V_{CC}5 = V_{CC}E = AV_{CC} = 5.0V \pm 10\%$, $V_{SS} = AV_{SS} = 0.0V$)
(External load capacitance 20pF)

Parameter	Symbol	Pin name	Conditions	Value		Unit	Remarks
				Min	Max		
Serial clock cycle time	t_{SCYCM}	SPI_CLK	Master	62.5	—	ns	*1 *2
			Slave	100	—	ns	
Valid CS → CLK start time (mode0/mode2)	$t_{OSLSK02}$	SPI_CLK, SPI_CS0, SPI_CS1, SPI_CS2, SPI_CS3	—	$1.5 \times t_{SCYCM} - 15$	—	ns	
Valid CS → CLK start time (mode1/mode3)	$t_{OSLSK13}$			$t_{SCYCM} - 15$	—	ns	
CLK end → Invalid CS time (mode0/mode2)	$t_{OSKSL02}$			t_{SCYCM} -10	—	ns	
CLK end → Invalid CS time (mode1/mode3)	$t_{OSKSL13}$			$1.5 \times t_{SCYCM}$ -10	—	ns	
SIO data output time	t_{OSDAT}	SPI_CLK, SPI_SIO0, SPI_SIO1, SPI_SIO2, SPI_SIO3	Master	-10	15	ns	
			Slave	—	28	ns	
SIO setup	t_{DSSET}	SPI_CLK, SPI_SIO0, SPI_SIO1, SPI_SIO2, SPI_SIO3	—	22	—	ns	
SIO hold	t_{SDHOLD}			$0.5 \times t_{SCYCM}$	—	ns	

*1: $V_{CC}E = 5.0V \pm 10\%$, or $V_{CC}E = 3.0$ to $3.6V$

*2: In the voltage range shown in *1, this parameter is defined when IOH is -2mA and IOL is 2mA.

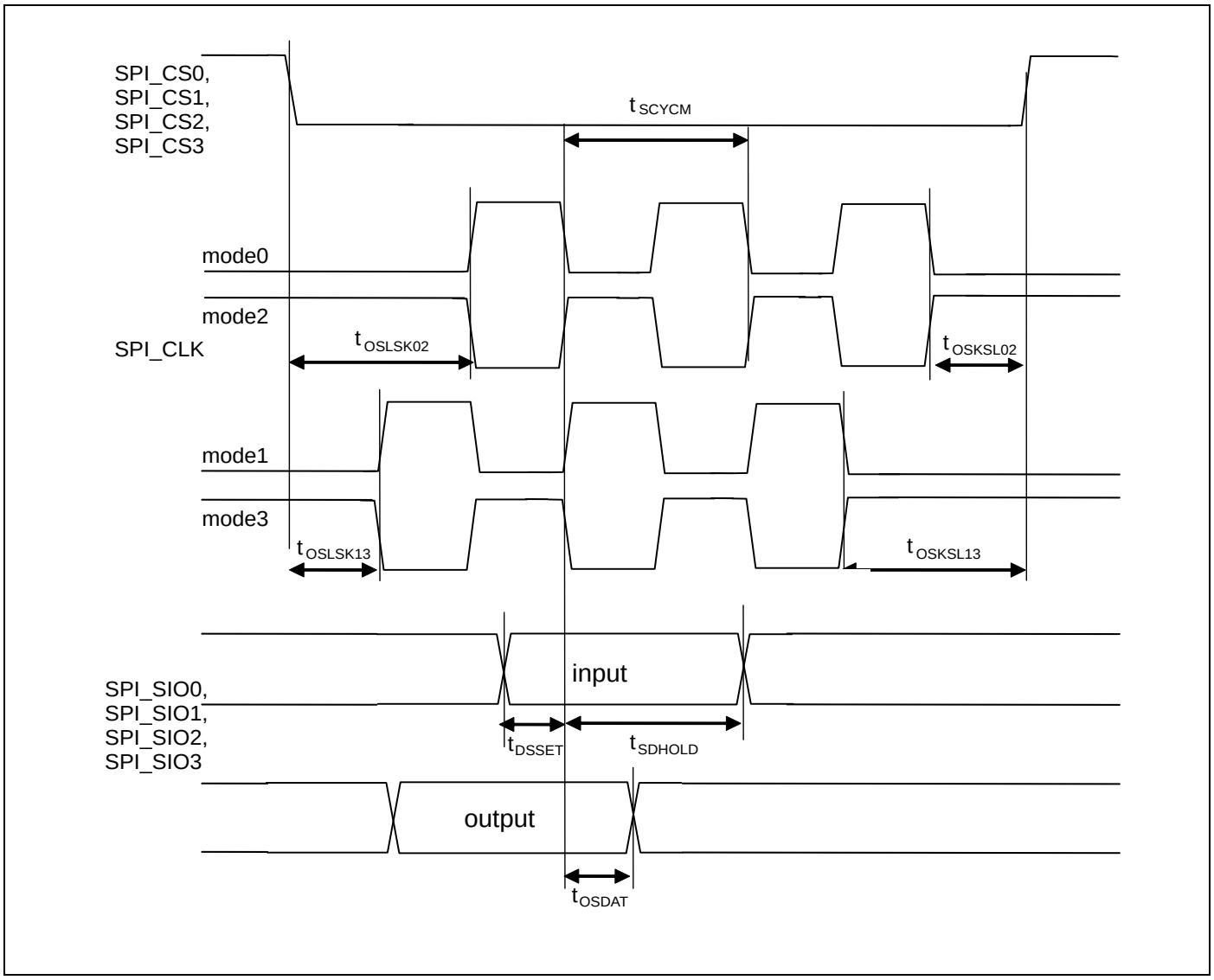
SPI_CS0,
SPI_CS1,
SPI_CS2,
SPI_CS3
tSCYCM
mode0
mode2
SPI_CLK
tOSLSK02
tOSKSL02
mode1
mode3
tOSLSK13
tOSKSL13
input
SPI_SIO0,
SPI_SIO1,
SPI_SIO2,
SPI_SIO3
tDSSET
tSDHOLD
output
tOSDAT

13.5 A/D Converter

13.5.1 Electrical Characteristics

(T_A: Recommended operating conditions, $V_{CC}5$ = 5.0V±10%, AV_{CC} = 5.0V±10%, V_{SS} = AV_{SS} = 0.0V)

Parameter	Symbol	Pin name	Value			Unit	Remarks
			Min	Typ	Max		
Resolution	–	–	–	–	10	bit	
Total error	–	–	–	–	±3.0	LSB	
Non linearity error	–	–	–	–	±2.5	LSB	
Differential linearity error	–	–	–	–	±1.9	LSB	
Zero transition voltage	V_{OT}	AN0 to AN39	AV_{SS} -1.5LSB	–	AV_{SS} +2.5LSB	V	1LSB= (AV_{CC}-AV_{SS}) /1024
Full-scale transition voltage	V_{FST}	AN0 to AN39	AV_{CC} -3.5LSB	–	AV_{CC} +0.5LSB	V	
Sampling time	t_{SMP}	–	1.2	–	–	µs	*1
Compare time	t_{CMP}	–	1.8	–	–	µs	*1
A/D conversion time	t_{CNV}	–	3.0	–	–	µs	*1
Analog port input current	I_{AIN}	AN0 to AN39	-5	–	+5	µA	$V_{AVSS} \le V_{AIN} \le V_{AVCC}$
Analog input voltage	V_{AIN}	AN0 to AN39	AV_{SS}	–	AVRH	V	
Reference voltage	AVRH	AVRH	4.5	–	5.5	V	$AV_{CC} \ge$ AVRH
	AVRL	AV_{SS}	–	0.0	–	V	
Power supply current	I_A	AV_{CC}	–	–	4.0	mA	
	I_{AH}		–	–	6.0	µA	*2
	I_R	AVRH	–	600	900	µA	
	I_{RH}		–	–	5	µA	*2
Variation between channels	–	AN0 to AN39	–	–	4	LSB	

*1: Time for each channel.

*2: Power supply current (V_{CC} = AV_{CC} = 5.0 V) is specified if A/D converter is not operating and CPU is stopped.

Note: Be sure to use the clock with a frequency between 8MHz and 17MHz for the ADC compare clock in order to ensure its accuracy.

13.5.2 Definition of A/D Converter Terms

Resolution	: Analog variation that is recognized by an A/D converter.
Linearity error	: Deviation of the actual conversion characteristics from a straight line that connects the zero transition point ("00 0000 0000"←→"00 0000 0001") to the full-scale transition point ("11 1111 1110"← →"11 1111 1111").
Differential linearity error	: Deviation of the input voltage from the ideal value that is required to change the output code by 1LSB.
Total error	: Difference between the actual value and the theoretical value. The total error includes zero transition error, full-scale transition error, and linearity error.

Total error

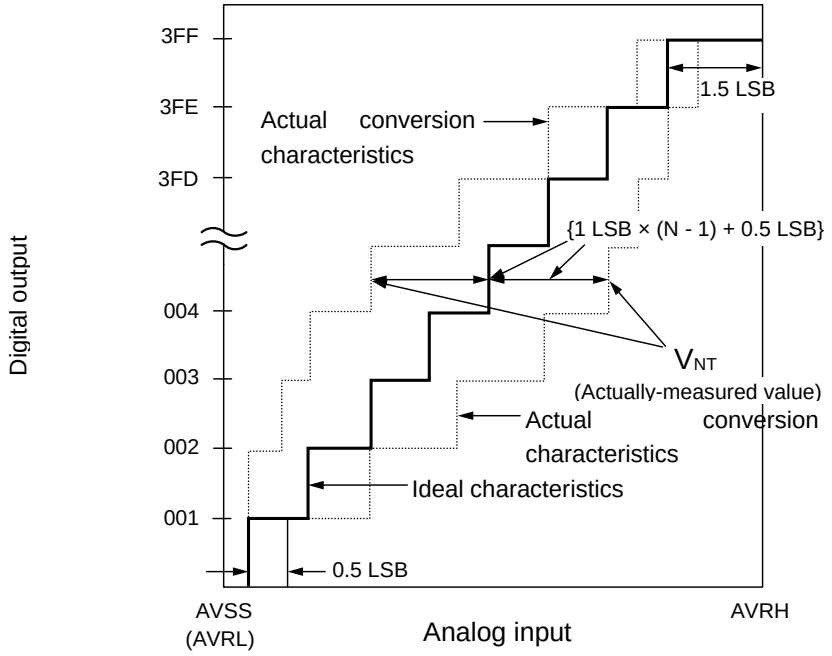

$$\text{Total error of digital output N} = \frac{V_{NT} - \{1LSB \times (N - 1) + 0.5LSB\}}{1LSB} \text{ [LSB]}$$

$$1LSB \text{ (Ideal value)} = \frac{AVRH - AVSS}{1024} \text{ [V]}$$

V_{OT} (Ideal value) = AVSS + 0.5 LSB[V]

V_{FST} (Ideal value) = AVRH - 1.5 LSB[V]

V_{NT}: Voltage at which the digital output changes from (N - 1) to N.

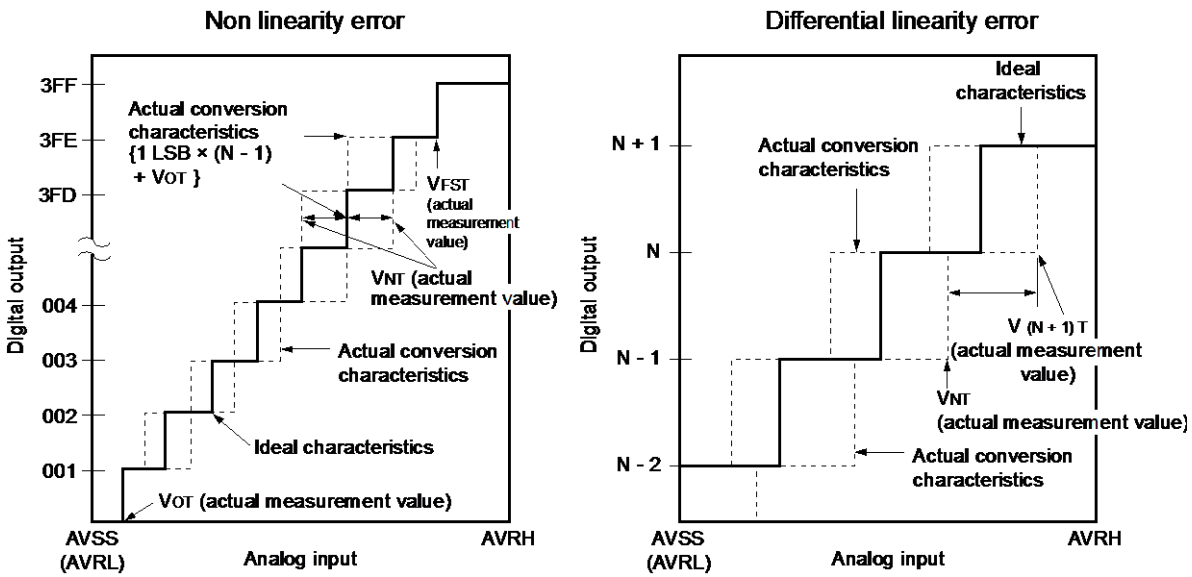

$$\text{Linearity error of digital output N} = \frac{V_{NT} - \{1LSB \times (N - 1) + V_{OT}\}}{1LSB} \text{ [LSB]}$$

$$\text{Differential linearity error of digital output N} = \frac{V_{(N+1)T} - V_{NT}}{1LSB} - 1 \text{ LSB [LSB]}$$

$$1LSB = \frac{V_{FST} - V_{OT}}{1022} \text{ [V]}$$

V_{OT}: Voltage at which the digital output changes from “000_H” to “001_H”.

V_{FST}: Voltage at which the digital output changes from “$3FE_H$” to “$3FF_H$”.

13.5.3 Notes on Using A/D Converter

<About the output impedance of the analog input of external circuit>

- External impedance values of the external input of 4.2 kΩ or lower (sampling time = 1.2 μs@ machine clock of 16 MHz) are recommended. When the external impedance is too high, the sampling time for analog voltages may not be sufficient. In this case, it is recommended to connect the capacitor (approx. 0.1 μF) to the analog input pin.

Analog input circuit model

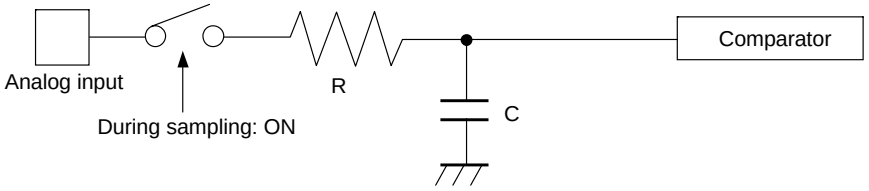

	R	C
MB91570series	4.0kΩ(Max)	16.5pF(Max) *

*: except DA shared pin

Note: Listed values must be considered as reference values.

13.6 D/A converter

(T_A: Recommended operating conditions, $V_{CC}5 = AV_{CC} = 5.0V \pm 10\%$, $V_{SS} = AV_{SS} = 0.0V$)

Parameter	Symbol	Pin name	Value			Unit	Remarks
			Min	Typ	Max		
Resolution	—	—	—	—	8	bit	
Differential linearity error	—	—	—	—	±3.0	LSB	
Conversion time	—	—	—	0.58	0.69	µs	Load capacitance: 20 pF
	—	—	—	2.90	3.43	µs	Load capacitance: 100 pF
Reference voltage supply current	I_{DVR}	AV_{CC}	—	475	580	µA	Per 1ch *
	I_{DVRS}	AV_{CC}	—	—	7.5	µA	Per 1ch in power down mode
Analog output impedance	—	—	—	3.8	4.5	kΩ	

*: Reference voltage supply current ($V_{CC} = AV_{CC} = 5.0$ V) is specified.

13.7 Flash memory

13.7.1 Electrical characteristics

Parameter	Value			Unit	Remarks
	Min	Typ	Max		
Sector erase time	–	200	800	ms	8 Kbyte sector*1, excluding internal preprogramming time
	–	300	1100	ms	8 Kbyte sector*1, including internal preprogramming time
	–	400	2000	ms	64 Kbyte sector*1, excluding internal preprogramming time
	–	700	3700	ms	64 Kbyte sector*1, including internal preprogramming time
8-bit writing time	–	9	288	µs	Exclusive of overhead time at system level*1
16-bit writing time	–	12	384	µs	Exclusive of overhead time at system level*1
ECC writing time	–	9	288	µs	Exclusive of overhead time at system level*1
Erase cycle*2/ Data retain time	1,000 cycles/ 20 years, 10,000 cycles/ 10 years, 100,000 cycles/ 5 years	–	–	–	Average T_A = +85°C*3

*1: The guaranteed value for erasure up to 100,000 cycles.

*2: Number of erase cycles for each sector.

*3: This value comes from the technology qualification (using Arrhenius equation to translate high temperature measurements into normalized value at + 85°C).

13.7.2 Notes

While the Flash memory is written or erased, shutdown of the external power ($V_{CC}5$) is prohibited.

In the application system where $V_{CC}5$ might be shut down while writing or erased, be sure to turn the power off by using an external low-voltage detection function.

To put it concretely, after the external power supply voltage falls below the detection voltage (V_{DL}*1), hold $V_{CC}5$ at 2.7V or more within the duration calculated by the following expression:

$$Td^{*1}[\mu s] + (\text{period of PCLK } [\mu s] \times 257) + 50\ [\mu s]$$

*1: See “13.4. AC characteristics, 13.4.10. Low voltage detection (External low-voltage detection)”.

14. Ordering Information

Part number	Package*
MB91F575BPMC	LQFP-144 pin, Plastic (FPT-144P-M08)
MB91F575BSPMC	
MB91F575BHPMC	
MB91F575BHSPMC	
MB91F575CPMC	
MB91F575CSPMC	
MB91F575CHPMC	
MB91F575CHSPMC	
MB91F577BPMC	
MB91F577BSPMC	
MB91F577BHPMC	
MB91F577BHSPMC	
MB91F577CPMC	
MB91F577CSPMC	
MB91F577CHPMC	
MB91F577CHSPMC	
MB91F578CPMC	
MB91F578CSPMC	
MB91F578CHPMC	
MB91F578CHSPMC	
MB91F579CPMC	
MB91F579CSPMC	
MB91F579CHPMC	
MB91F579CHSPMC	
MB91F575BSPMC1	LQFP-144 pin, Plastic (FPT-144P-M12)
MB91F575BHSPMC1	
MB91F577BSPMC1	
MB91F577BHSPMC1	
MB91F578CPMC1	
MB91F578CSPMC1	
MB91F578CHPMC1	
MB91F578CHSPMC1	
MB91F579CPMC1	
MB91F579CSPMC1	
MB91F579CHPMC1	
MB91F579CHSPMC1	

Part number	Package*
MB91F578CMPMC	LQFP-208-pin, Plastic (FPT-208P-M06)
MB91F578CSMPMC	
MB91F578CHMPMC	
MB91F578CHSMPMC	
MB91F579CMPMC	
MB91F579CSMPMC	
MB91F579CHMPMC	
MB91F579CHSMPMC	

*: For details of the package, see “Package Dimensions”.

15. Package Dimensions

144-pin plastic LQFP		
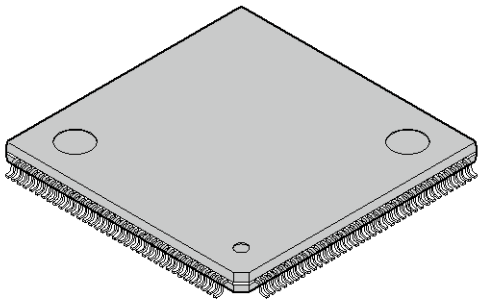	Lead pitch	0.50 mm
	Package width × package length	20.0 × 20.0 mm
	Lead shape	Gullwing
	Sealing method	Plastic mold
	Mounting height	1.70 mm MAX
	Weight	1.20 g
(FPT-144P-M08)	Code (Reference)	P-LFQFP144-20×20-0.50

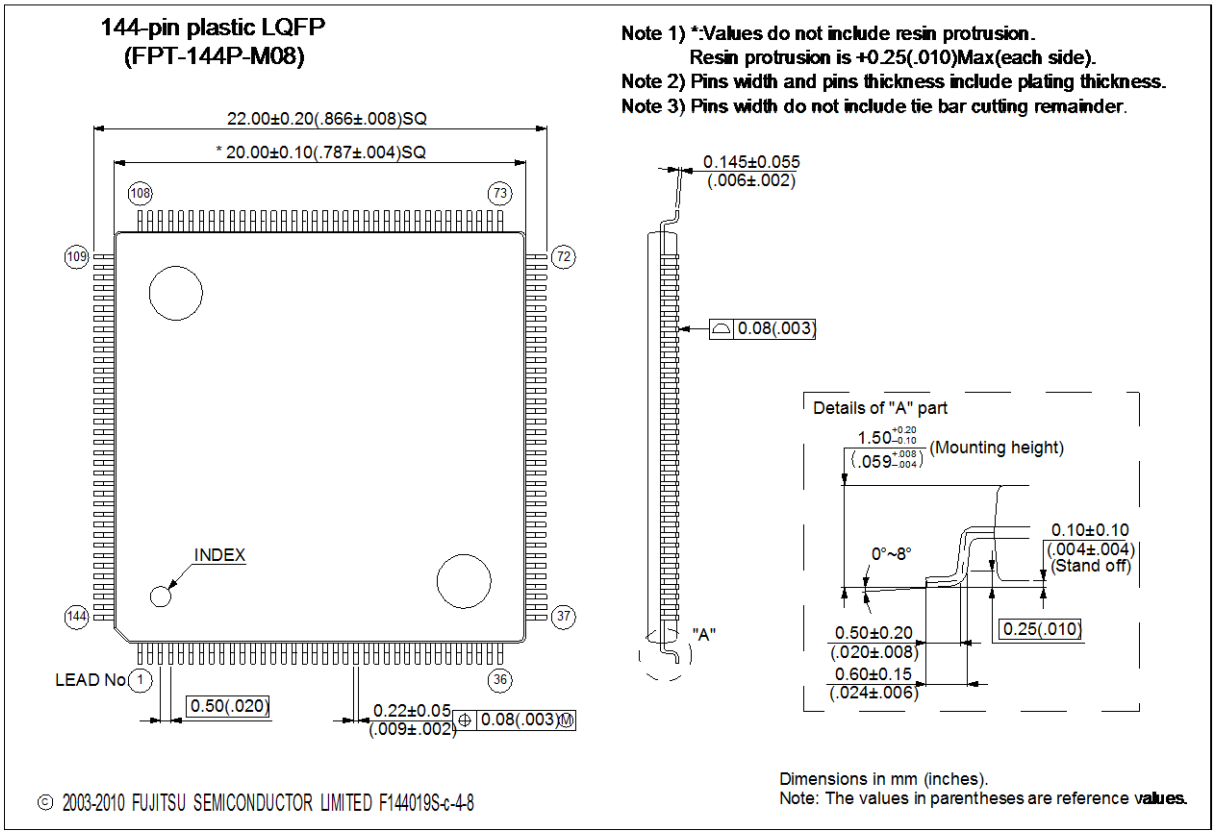

144-pin plastic LQFP		
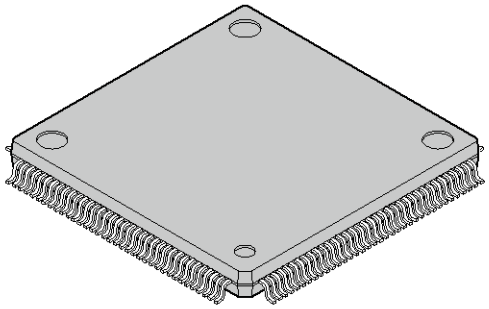	Lead pitch	0.40 mm
	Package width × package length	16.0 × 16.0 mm
	Lead shape	Gullwing
	Sealing method	Plastic mold
	Mounting height	1.70 mm MAX
	Weight	0.88 g
(FPT-144P-M12)	Code (Reference)	P-LFQFP144-16×16-0.40

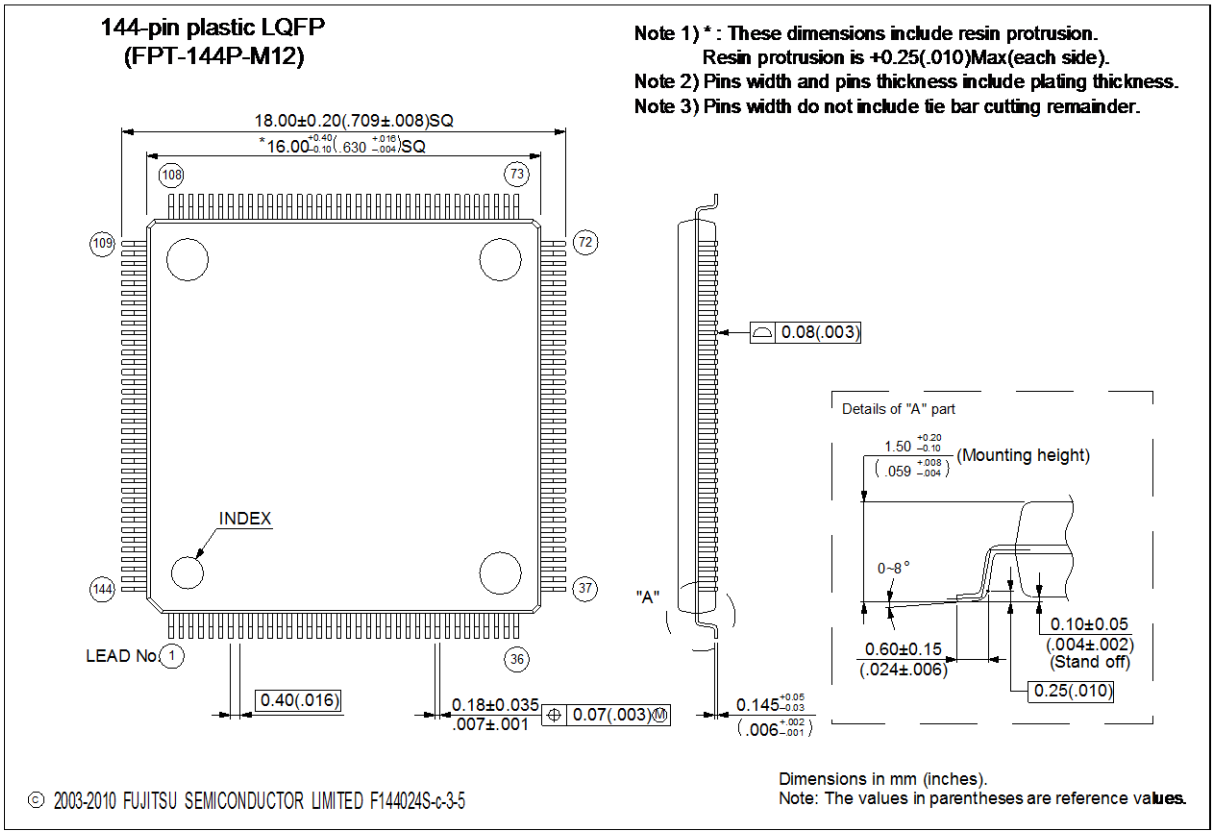

208-pin plastic LQFP		
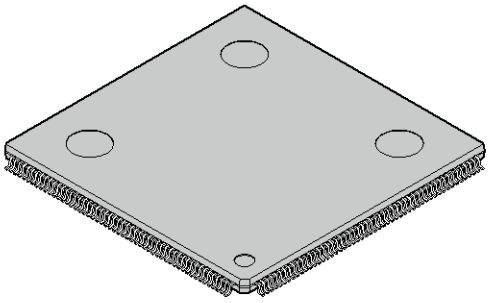	Lead pitch	0.50 mm
	Package width × package length	28.0 × 28.0 mm
	Lead shape	Gullwing
	Sealing method	Plastic mold
	Mounting height	1.70 mm MAX
	Weight	2.55 g
(FPT-208P-M06)	Code (Reference)	P-LFQFP208-28×28-0.50

208-pin plastic LQFP
(FPT-208P-M06)

Note 1) * : These dimensions do not include resin protrusion.
Note 2) Pins width and pins thickness include plating thickness.
Note 3) Pins width do not include tie bar cutting remainder.

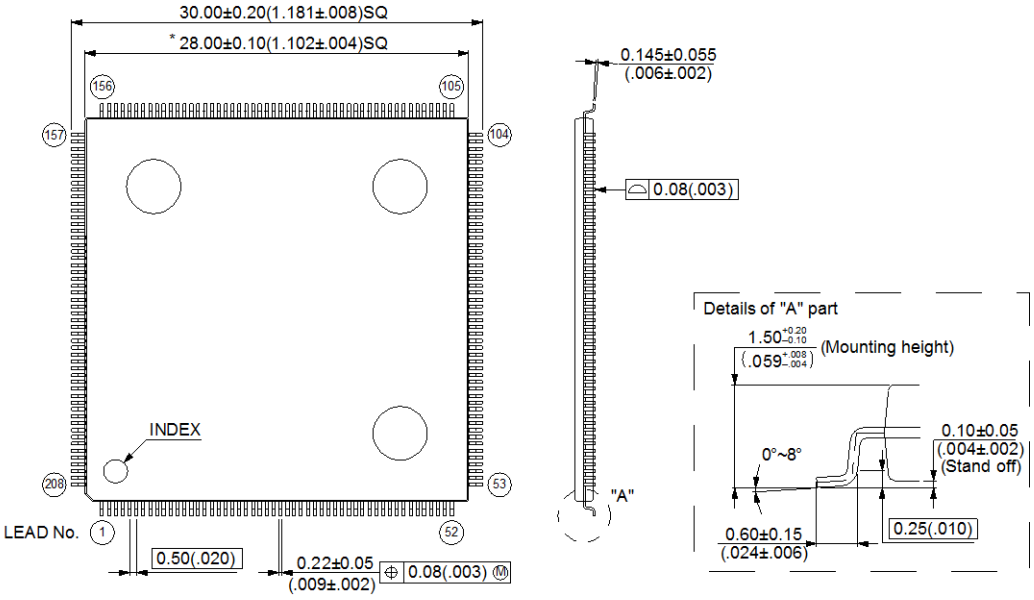

Dimensions in mm (inches).
Note: The values in parentheses are reference values.

© 2003-2010 FUJITSU SEMICONDUCTOR LIMITED F208027S-c-3-5

16. Major Changes

Spansion Publication Number: MB91F577_DS705-00009

Page	Section	Change Results
Revision 2.0		
-	-	Initial release
Revision 2.1		
-	-	Company name and layout design change
Revision 2.2		
-	P104-P108	Revised text position

Note: Please see “Document History” about later revised information.

Document History

Document Title: MB91570 Series 32-bit Microcontroller
Document Number: 002-04725

Revision	ECN	Orig. of Change	Submission Date	Description of Change
**	–	NNAS	06/19/2015	Migrated to Cypress and assigned document number 002-04725. No change to document contents or format.
*A	5174263	NNAS	03/16/2016	Updated to Cypress format.

Sales, Solutions, and Legal Information

Worldwide Sales and Design Support

Cypress maintains a worldwide network of offices, solution centers, manufacturer's representatives, and distributors. To find the office closest to you, visit us at Cypress Locations.

Products

ARM® Cortex® Microcontrollers	cypress.com/arm
Automotive	cypress.com/automotive
Clocks & Buffers	cypress.com/clocks
Interface	cypress.com/interface
Lighting & Power Control	cypress.com/powerpsoc
Memory	cypress.com/memory
PSoC	cypress.com/psoc
Touch Sensing	cypress.com/touch
USB Controllers	cypress.com/usb
Wireless/RF	cypress.com/wireless

PSoC® Solutions

psoc.cypress.com/solutions

PSoC 1 | PSoC 3 | PSoC 4 | PSoC 5LP

Cypress Developer Community

Community | Forums | Blogs | Video | Training

Technical Support

cypress.com/go/support

ARM and Cortex are the registered trademarks of ARM Limited in the EU and other countries.

© Cypress Semiconductor Corporation 2013-2016. This document is the property of Cypress Semiconductor Corporation and its subsidiaries, including Spansion LLC ("Cypress"). This document, including any software or firmware included or referenced in this document ("Software"), is owned by Cypress under the intellectual property laws and treaties of the United States and other countries worldwide. Cypress reserves all rights under such laws and treaties and does not, except as specifically stated in this paragraph, grant any license under its patents, copyrights, trademarks, or other intellectual property rights. If the Software is not accompanied by a license agreement and you do not otherwise have a written agreement with Cypress governing the use of the Software, then Cypress hereby grants you under its copyright rights in the Software, a personal, non-exclusive, nontransferable license (without the right to sublicense) (a) for Software provided in source code form, to modify and reproduce the Software solely for use with Cypress hardware products, only internally within your organization, and (b) to distribute the Software in binary code form externally to end users (either directly or indirectly through resellers and distributors), solely for use on Cypress hardware product units. Cypress also grants you a personal, non-exclusive, nontransferable, license (without the right to sublicense) under those claims of Cypress's patents that are infringed by the Software (as provided by Cypress, unmodified) to make, use, distribute, and import the Software solely to the minimum extent that is necessary for you to exercise your rights under the copyright license granted in the previous sentence. Any other use, reproduction, modification, translation, or compilation of the Software is prohibited.

CYPRESS MAKES NO WARRANTY OF ANY KIND, EXPRESS OR IMPLIED, WITH REGARD TO THIS DOCUMENT OR ANY SOFTWARE, INCLUDING, BUT NOT LIMITED TO, THE IMPLIED WARRANTIES OF MERCHANTABILITY AND FITNESS FOR A PARTICULAR PURPOSE. Cypress reserves the right to make changes to this document without further notice. Cypress does not assume any liability arising out of the application or use of any product or circuit described in this document. Any information provided in this document, including any sample design information or programming code, is provided only for reference purposes. It is the responsibility of the user of this document to properly design, program, and test the functionality and safety of any application made of this information and any resulting product. Cypress products are not designed, intended, or authorized for use as critical components in systems designed or intended for the operation of weapons, weapons systems, nuclear installations, life-support devices or systems, other medical devices or systems (including resuscitation equipment and surgical implants), pollution control or hazardous substances management, or other uses where the failure of the device or system could cause personal injury, death, or property damage ("Unintended Uses"). A critical component is any component of a device or system whose failure to perform can be reasonably expected to cause the failure of the device or system, or to affect its safety or effectiveness. Cypress is not liable, in whole or in part, and Company shall and hereby does release Cypress from any claim, damage, or other liability arising from or related to all Unintended Uses of Cypress products. Company shall indemnify and hold Cypress harmless from and against all claims, costs, damages, and other liabilities, including claims for personal injury or death, arising from or related to any Unintended Uses of Cypress products.

Cypress, the Cypress logo, Spansion, the Spansion logo, and combinations thereof, PSoC, CapSense, EZ-USB, F-RAM, and Traveo are trademarks or registered trademarks of Cypress in the United States and other countries. For a more complete list of Cypress trademarks, visit cypress.com. Other names and brands may be claimed as property of their respective owners.