ECN#	APP'D./DATE	REV.
10298	LEO 4-18-94	4

SAFETY ORGANIZATION(S):

THIS FILTER HAS BEEN FORMALLY RECOGNIZED, CERTIFIED OR APPROVED BY THE LISTED AGENCY. THEREFORE, ALL TEST/REQUIREMENTS SPECIFIED IN THE LATEST REVISION OF THE FOLLOWING AGENCY STANDARDS HAVE BEEN MET:

UL RECOGNIZED UL 1283

OPERATING SPECIFICATIONS:

LINE VOLTAGE/CURRENT: 20 AMP, 120/250 VAC

LINE FREQUENCY: 50-60Hz

MAX. LEAKAGE CURRENT, EACH: 0.5 mA AT 120V 60Hz
LINE TO GROUND: .83 mA at 250V 50Hz

OPERATING AMBIENT TEMP. RANGE: -10°C TO +40°C @ RATED CURRENT, I_r

IN AN AMBIENT, T_a, HIGHER THAN 40°C, THE MAXIMUM OPERATING CURRENT, I_o, IS AS FOLLOWS:

$$I_o = I_r\sqrt{\frac{85-T_a}{45}}$$

RELIABILITY SPECIFICATIONS:

STORAGE TEMPERATURE: -40°C TO +85°C
HUMIDITY: 21 DAYS @ 40°C 95% RH
CURRENT OVERLOAD TEST: 6 TIMES RATED CURRENT FOR 8 SECONDS

TEST SPECIFICATIONS:

INDUCTANCE: .99 mH NOMINAL
CAPACITANCE: (MEASURED @ 1 KHz, 0.25VAC MAX., 25°C±1°C)
LINE TO GROUND: .011 µF ±20%
LINE TO LINE: .813 µF ±20%
DISCHARGE RESISTOR: 330KΩ

LINE/GROUND AND LINE/LINE: 6000MΩ (MIN) AT 100VDC
INSULATION RESISTANCE: 20°C AND 50% RH

RECOMMENDED RECEIVING INSPECTION HIPOT:

LINES TO GROUND: 2250 VDC FOR 1 MINUTE
LINE TO LINE: 1450 VDC FOR 1 MINUTE

FILTER APPROVAL:

THE BEST WAY TO SELECT AND QUALIFY A FILTER IS FOR YOUR ENGINEERING TO TEST THE UNIT IN YOUR EQUIPMENT.

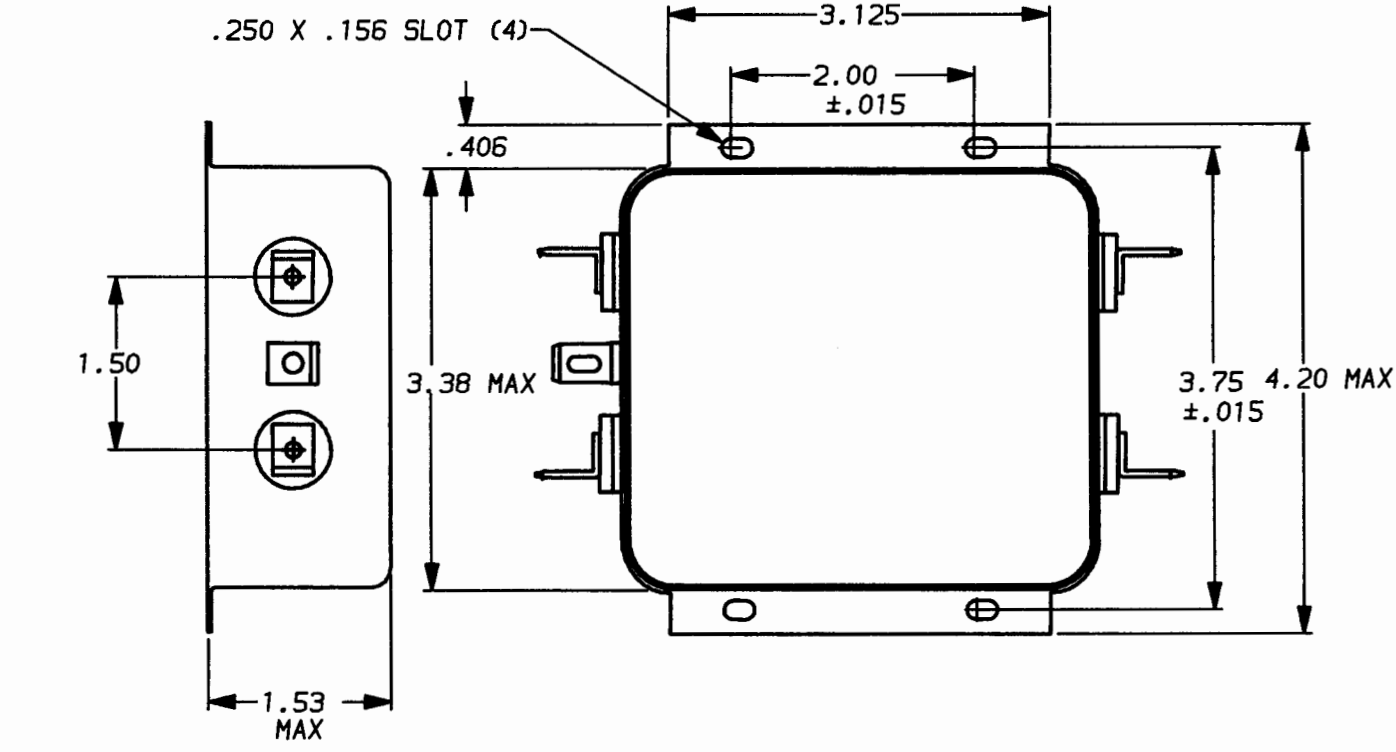

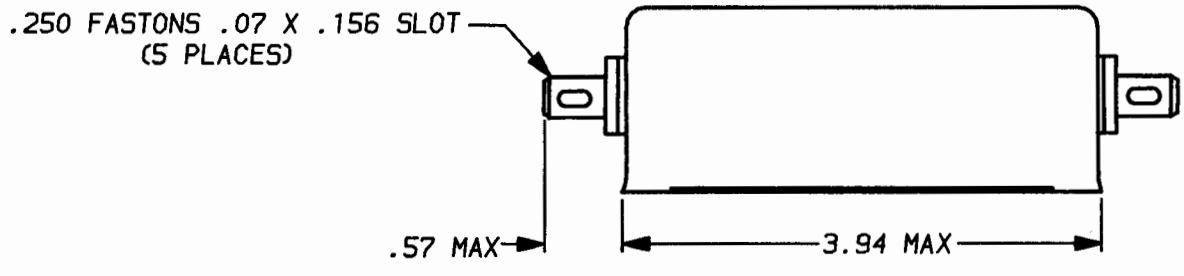

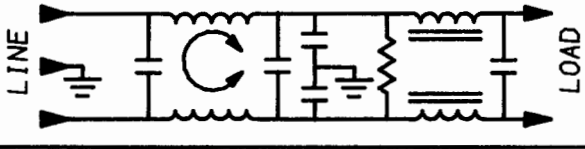

50Ω - 50Ω (MINIMUM) INSERTION LOSS

FREQUENCY MHz	.15	.5	1	2	5	10	20	30				
COMMON dB	15	30	41	48	60	46	36	30				
DIFF. dB	30	65	65	65	65	60	57	55				

UNLESS OTHERWISE SPECIFIED, TOLERANCE TO BE ±.025

MATERIAL & FINISH: AS SUPPLIED

This document is proprietary to CORCOM INC. and is not to be reproduced nor used for manufacturing purposes except on CORCOM'S prior written consent.

corcom
LIBERTYVILLE, IL 60048

POWER LINE FILTER

DATE: 4-18-94
APPRVD. LEO
CATALOG NO. 20V1.04
CAD NO. 20V1.04