LTR	EN	DESCRIPTION	APPR	BY	DATE
A	–	INITIAL RELEASE	MT	DC	12–28–07

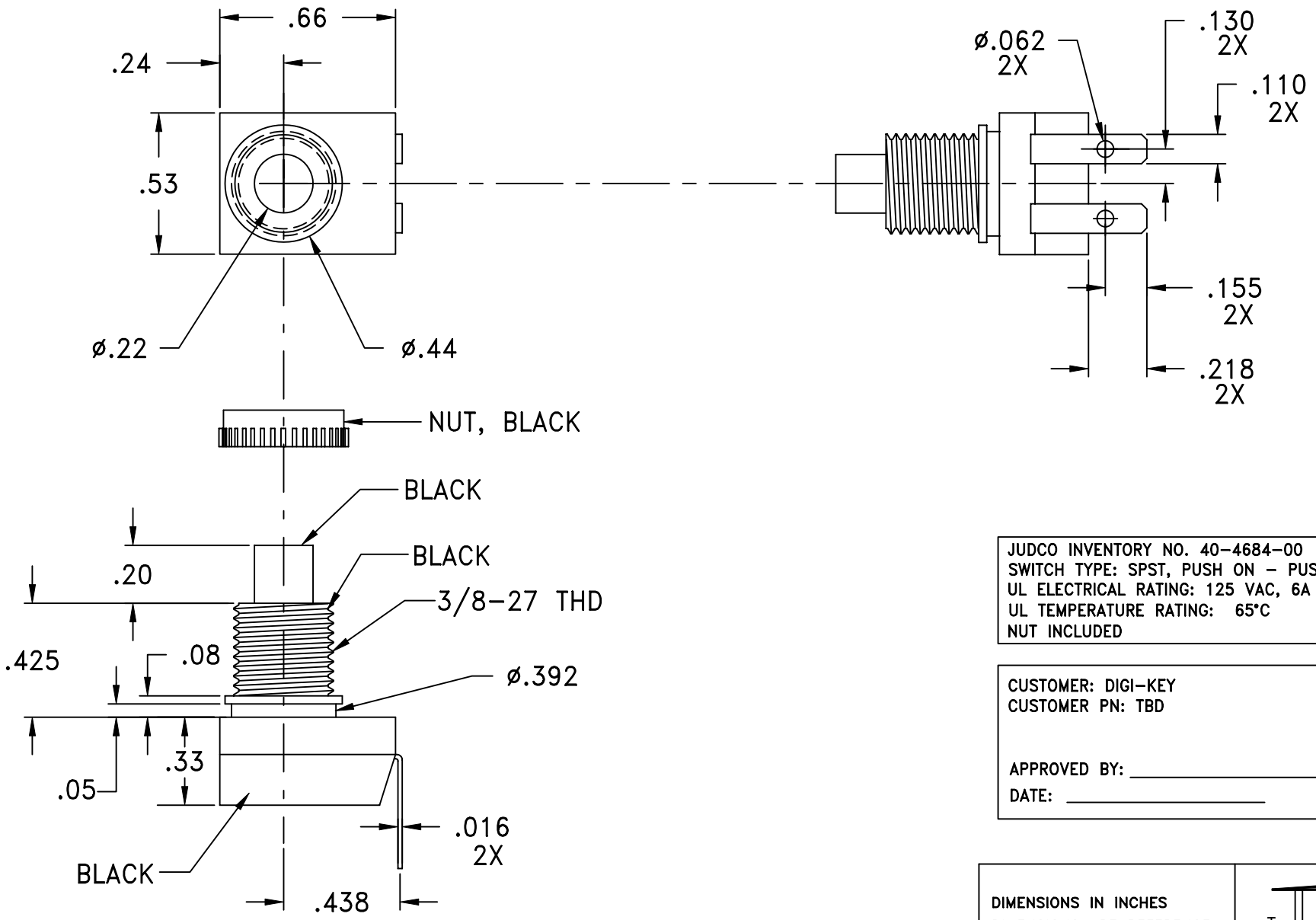

JUDCO INVENTORY NO. 40–4684–00
SWITCH TYPE: SPST, PUSH ON – PUSH OFF
UL ELECTRICAL RATING: 125 VAC, 6A
UL TEMPERATURE RATING: 65°C
NUT INCLUDED

CUSTOMER: DIGI–KEY
CUSTOMER PN: TBD

APPROVED BY: _____
DATE: _____

DIMENSIONS IN INCHES
DIMENSIONS ARE REFERENCE

DRAWN:	DC	12–28–07
APPR:	KJ	12–28–07
ENG'G:	IS	12–28–07

1415U1280A.DWG

JUDCO ®
HARBOR CITY CALIFORNIA

TITLE OUTLINE
J–188A–1 ULAC W/BENT TRMS

DWG. NO. 1415–1280

SHEET 1 OF 1

This document embodies a product, component, and/or design proprietary to JUDCO MANUFACTURING INC., and which is protected either as a trade secret, by U.S. Patent, or by copyright. It may not be used in any way without written express consent of JUDCO MANUFACTURING INC.