REVISIONS				
REV.	ECO. NO	DESCRIPTION	DATE	BY
A	2268	INITIAL RELEASE	03/21/2011	LH
B	2422	ADD 'P' PLATING OPTION	08/09/2011	GC

PART NUMBER CODING

_ _ _C_ _ _D_ _N-M71RC

INSULATOR / CONTACT MATERIAL

PR= PBT / BRASS
OPERATING TEMPERATURE: -40° C TO +105° C.
PROCESSING TEMP: 245°C ± 5°C FOR 3~5 SECS MAX.

NR= NYLON 6T / BRASS
OPERATING TEMPERATURE: -40° C TO +105° C.
PROCESSING TEMP: 230°C FOR 60 SECS MAX.
(260°C FOR 10 SECS MAX.)

GR= NYLON 9T / BRASS
OPERATING TEMPERATURE: -40° C TO +105° C.
PROCESSING TEMP: 230°C FOR 60 SECS MAX.
(260°C FOR 10 SECS MAX.)

TERMINATION TYPE

NUMBER OF POSITIONS
(CONTACTS PER ROW, 002 THRU 040)

PLATING
(ALL PLATINGS HAVE .000030"~.000050" MIN NICKEL UNDERPLATE)

	CONTACT SURFACE	TERMINATION
B =	.000010" GOLD	.000100" PURE TIN, MATTE
C =	.000030" GOLD	.000100" PURE TIN, MATTE
E =	TIN OVERALL	
P =	GOLD FLASH OVERALL	

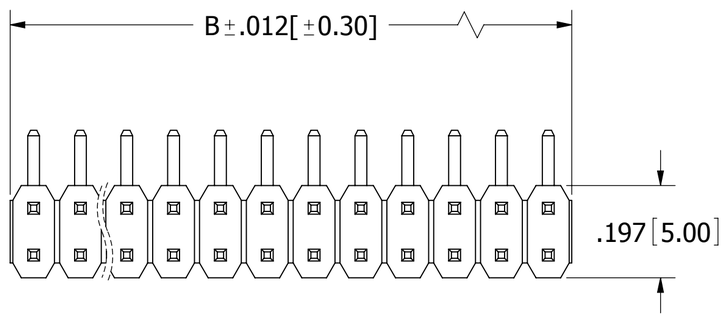

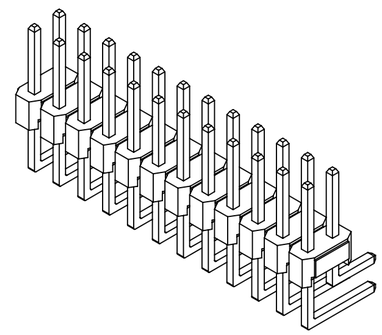

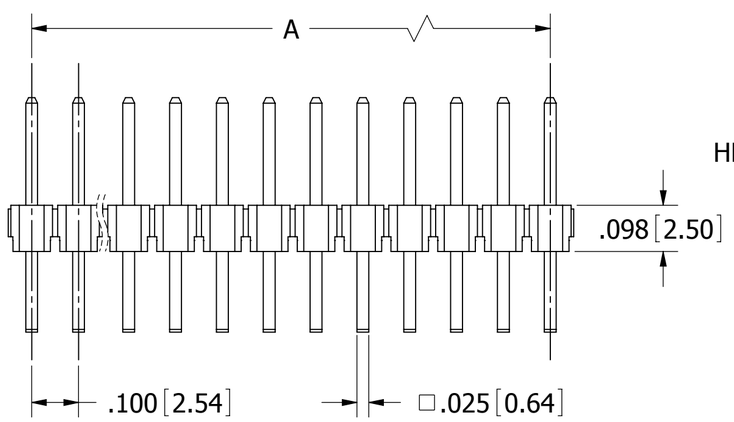

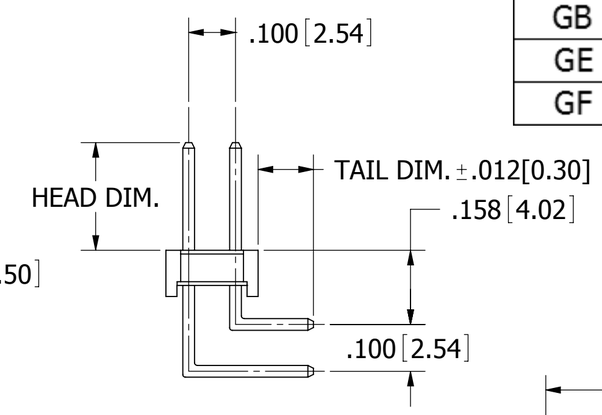

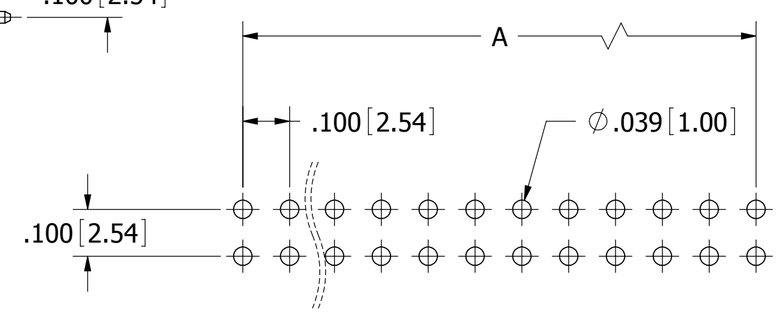

RECOMMENDED PCB LAYOUT

TERMINATION TYPE				
CODE	HEAD DIM		TAIL DIM	
	INCH	MM	INCH	MM
BA	0.230	5.84	0.120	3.05
BB	0.230	5.84	0.220	5.59
BC	0.230	5.84	0.320	8.13
BD	0.230	5.84	0.420	10.67
BE	0.230	5.84	0.520	13.21
BH	0.230	5.84	0.820	20.83
BI	0.230	5.84	0.920	23.37
BJ	0.230	5.84	1.020	25.91
GA	0.318	8.08	0.120	3.05
GB	0.318	8.08	0.220	5.59
GE	0.318	8.08	0.620	15.75
GF	0.318	8.08	0.820	20.83

PART NUMBER	A		B	
	INCH	MM	INCH	MM
_ _ _C002D_ _N-M71RC	0.100	2.54	0.200	5.08
_ _ _C003D_ _N-M71RC	0.200	5.08	0.300	7.62
_ _ _C004D_ _N-M71RC	0.300	7.62	0.400	10.16
_ _ _C005D_ _N-M71RC	0.400	10.16	0.500	12.70
_ _ _C006D_ _N-M71RC	0.500	12.70	0.600	15.24
_ _ _C007D_ _N-M71RC	0.600	15.24	0.700	17.78
_ _ _C008D_ _N-M71RC	0.700	17.78	0.800	20.32
_ _ _C009D_ _N-M71RC	0.800	20.32	0.900	22.86
_ _ _C010D_ _N-M71RC	0.900	22.86	1.000	25.40
_ _ _C011D_ _N-M71RC	1.000	25.40	1.100	27.94
_ _ _C012D_ _N-M71RC	1.100	27.94	1.200	30.48
_ _ _C013D_ _N-M71RC	1.200	30.48	1.300	33.02
_ _ _C014D_ _N-M71RC	1.300	33.02	1.400	35.56
_ _ _C015D_ _N-M71RC	1.400	35.56	1.500	38.10
_ _ _C016D_ _N-M71RC	1.500	38.10	1.600	40.64
_ _ _C017D_ _N-M71RC	1.600	40.64	1.700	43.18
_ _ _C018D_ _N-M71RC	1.700	43.18	1.800	45.72
_ _ _C019D_ _N-M71RC	1.800	45.72	1.900	48.26
_ _ _C020D_ _N-M71RC	1.900	48.26	2.000	50.80
_ _ _C021D_ _N-M71RC	2.000	50.80	2.100	53.34
_ _ _C022D_ _N-M71RC	2.100	53.34	2.200	55.88
_ _ _C023D_ _N-M71RC	2.200	55.88	2.300	58.42
_ _ _C024D_ _N-M71RC	2.300	58.42	2.400	60.96
_ _ _C025D_ _N-M71RC	2.400	60.96	2.500	63.50
_ _ _C026D_ _N-M71RC	2.500	63.50	2.600	66.04
_ _ _C027D_ _N-M71RC	2.600	66.04	2.700	68.58
_ _ _C028D_ _N-M71RC	2.700	68.58	2.800	71.12
_ _ _C029D_ _N-M71RC	2.800	71.12	2.900	73.66
_ _ _C030D_ _N-M71RC	2.900	73.66	3.000	76.20
_ _ _C031D_ _N-M71RC	3.000	76.20	3.100	78.74
_ _ _C032D_ _N-M71RC	3.100	78.74	3.200	81.28
_ _ _C033D_ _N-M71RC	3.200	81.28	3.300	83.82
_ _ _C034D_ _N-M71RC	3.300	83.82	3.400	86.36
_ _ _C035D_ _N-M71RC	3.400	86.36	3.500	88.90
_ _ _C036D_ _N-M71RC	3.500	88.90	3.600	91.44
_ _ _C037D_ _N-M71RC	3.600	91.44	3.700	93.98
_ _ _C038D_ _N-M71RC	3.700	93.98	3.800	96.52
_ _ _C039D_ _N-M71RC	3.800	96.52	3.900	99.06
_ _ _C040D_ _N-M71RC	3.900	99.06	4.000	101.60

NOTES:
1. INSULATOR MATERIAL: SEE PART NUMBER CODING, UL 94V-0, BLACK.
2. CONTACT MATERIAL: SEE PAART NUMBER CODING.
3. CONTACT PLATING: SEE PART NUMBER CODING.
4. CURRENT RATING: 3 AMPS PER CONTACT.
5. INSULATOR RESISTANCE: 5000 MEGOHMS MIN.
6. CONTACT RESISTANCE: 20 MILLIOHMS MAX.
7. DIELECTRIC WITHSTANDING: 1000 VAC.
8. OPERATING TEMPERATURE: SEE PART NUMBER CODING.
9. *PROCESSING TEMP.: SEE PART NUMBER CODING.

*INDICATED TEMPERATURE AND TIME IS FOR COMPONENT INSULATOR. HIGHER PROCESSING TEMPERATURES MAY BE USED, PROVIDED HEAT IS APPLIED FROM BACK SIDE OF PCB, AND INSULATOR DOES NOT EXCEED INDICATED TEMPERATURE AND TIME.

RoHS COMPLIANT

UNLESS OTHERWISE SPECIFIED:
DIMENSIONS ARE IN INCHES [MM]

TOLERANCES: ANGULAR:
.XX=± .012 [.30]
.XXX=± .008 [.20]
.XXXX=± .0040 [.100]

INTERPRET DIMENSIONS AND TOLERANCING PER: ASME Y14.5M-2009

DRAWN	DATE	NAME
	03/21/2011	LH

THE INFORMATION HEREIN CONTAINS PROPIETARY INFORMATION OF SULLINS ELECTRONICS AND IS NOT TO BE REPRODUCED, USED OR DISCLOSED TO OTHERS FOR ANY PURPOSE EXCEPT AS SPECIFICALLY AUTHORIZED IN WRITING BY AN OFFICER OF SULLINS ELECTRONICS.

SULLINS CONNECTOR SOLUTIONS

TITLE
HEADER .100"[2.54mm]PITCH, 2 ROWS, RA

PART NUMBER
_ R _C_ _ _-D_ _N-M71RC

SIZE	CAGE CODE	DWG. NO.	REV
C	54453	11639	B

SCALE: 4:1 SHEET 1 OF 1

FILE NAME: Z:\ECO PENDING\2422, TAIWAN HEADER 100 CC ADD P PLATING\11639, _ R_C_ _ _D_ _N-M71RC PRINT: 8/26/2011