版数 VER.	年月日 DATE	CN NO.	変更内容 DESCRIPTION	製図 DR.	担当 CHK.	査閲 APPD.	承認 APPD.
2	25/JUN/2015	013535	ADDED DIMENSION	K. SAITOU	K. UEDA	—	Y. SAITOU
3	07/JAN/2016	015856	ADDED NOTE etc.		K. SAITOU	—	Y. SAITOU

図面番号(DRAWING NO.) SJ115946

WISDOM承認 2016/01/22

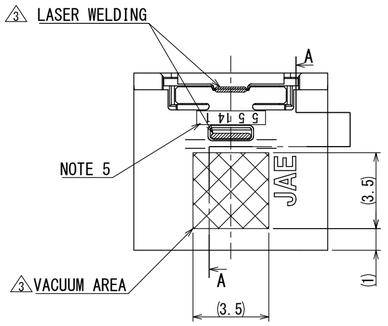

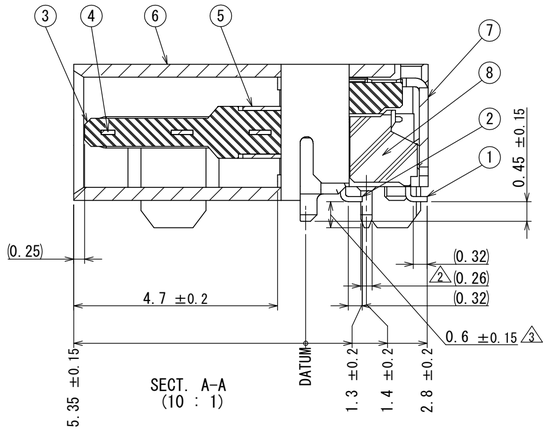

SECT. A-A
(10 : 1)

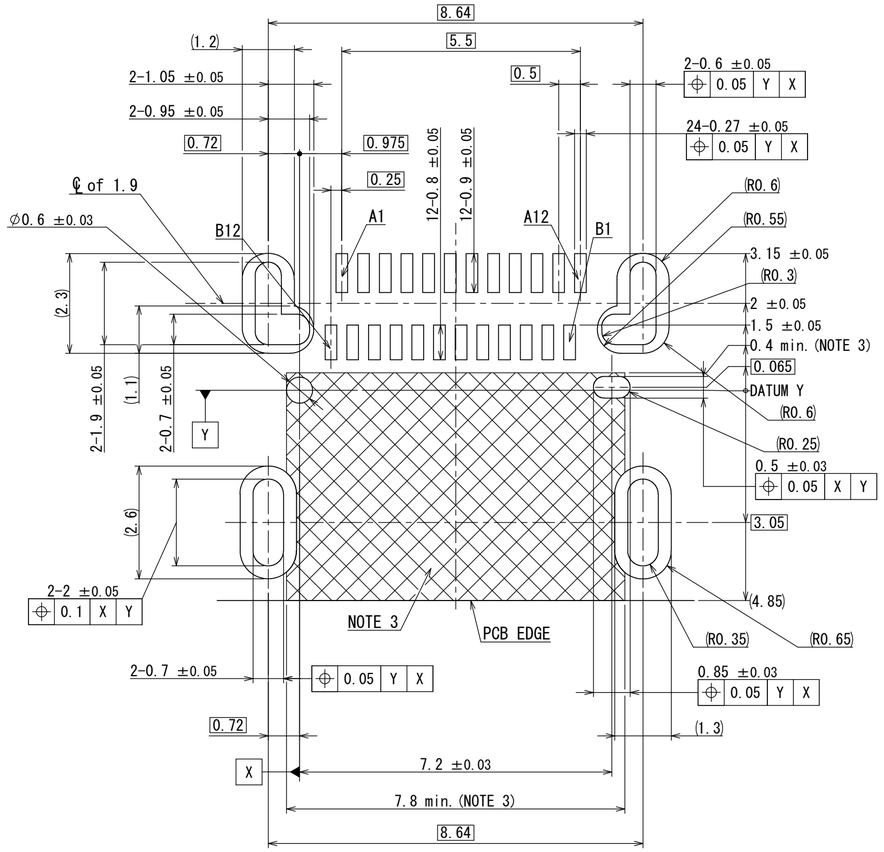

3 CONNECTOR MOUNTING SURFACE SIDE VIEW

APPLICABLE P.C.B DIMENSION (REF.)
適合基板寸法（参考）

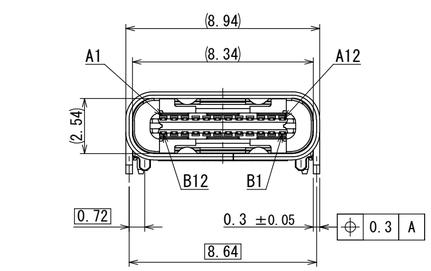

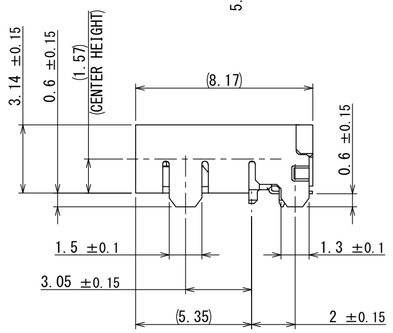

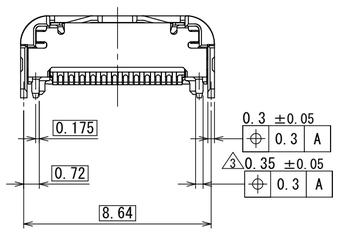

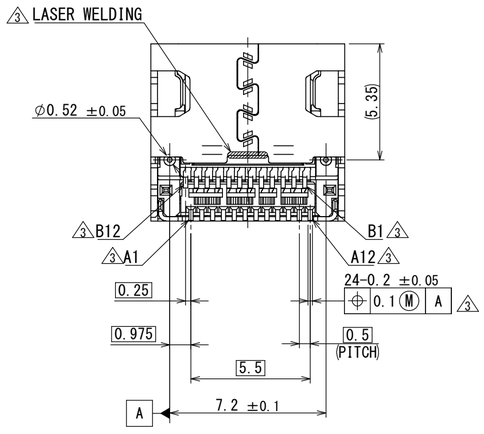

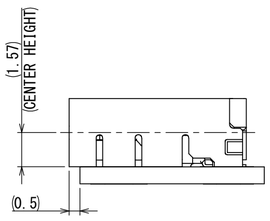

MOUTING CONDITION (REF.)
実装状態図（参考）

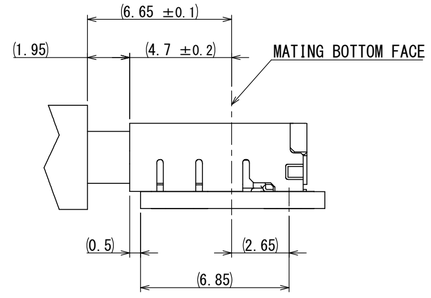

3 MATED CONDITION (REF.)
嵌合状態図（参考）

NOTE 1. THIS PRODUCT IS HALOGEN-FREE PRODUCT.
NOTE 2. COPLANARITY OF SMT TERMINAL IS 0.1 MAX.
NOTE 3. NO PCB ROUTING ALLOWED IN THIS AREA.
NOTE 4. THE SHELL LENGTH IS LESS THAN THE MINIMUM REFERENCES IN THE USB TYPE C STANDARD. AS SUCH THE SYSTEM IMPLEMENTER IS RESPONSIBLE FOR ACHIEVING PRODUCT RELIABILITY. THAT THE CONNECTOR BE MOUNTED SUCH THAT ALL FUNCTIONAL USB REQUIREMENTS ARE MET.
NOTE 5. LOT NUMBER IS MARKED AS INDICATED.

(EX) 5 5 14 1
- YEAR (END OF ONE DIGIT AT CHRISTIAN ERA)
- MONTH (JAN. TO SEP. :1 TO 9, OCT. :O, NOV. :X, DEC. :Y)
- DAY (TWO-DIGITS NUMBER)
- EQUIPMENT No. (NUMBER OR ALPHABET)

3 TABLE 1. CONTACT PLATING

	FINISH	PLATING THICKNESS
CONTACT AREA	GOLD FLASH OVER PLLADIUM-NICKEL OVER NICKEL	NICKEL:2μm MIN. PALLADIUM-NICKEL:0.75μm MIN. GOLD FLASH:0.05μm MIN.
SOLDER TALES	GOLD FLASH OVER NICKEL	NICKEL:2μm MIN. GOLD FLASH:0.03μm MIN.

3 NOTE 6. PIN ASSIGNMENT (FRONT VIEW)

Pin No.	A1	A2	A3	A4	A5	A6	A7	A8	A9	A10	A11	A12
	GND	TX1+	TX1-	V_{BUS}	CC1	D+	D-	SBU1	V_{BUS}	RX2-	RX2+	GND
	GND	RX1+	RX1-	V_{BUS}	SBU2	D-	D+	CC2	V_{BUS}	TX2-	TX2+	GND
Pin No.	B12	B11	B10	B9	B8	B7	B6	B5	B4	B3	B2	B1

符号 NO.	名称 DESCRIPTION	個数 QTY.	材料 MATERIAL	仕上 FINISH	備考 REMARKS
8	INSULATOR 2	1	HEAT RESISTING PLASTIC	COLOR:BLACK	
7	REAR SHIELD	1	STAINLESS STEEL	NICKEL PLATING	
6	SHELL	1	STAINLESS STEEL	NICKEL PLATING	
5	GND PLATE	2	STAINLESS STEEL	NICKEL PLATING	
4	MID PLATE	1	STAINLESS STEEL	NICKEL PLATING	
3	INSULATOR 1	1	HEAT RESISTING PLASTIC	COLOR:BLACK	
2	CONTACT B	12	COPPER ALLOY	TABLE 1 3	
1	CONTACT A	12	COPPER ALLOY	TABLE 1 3	

仕様書(SPECIFICATION): JACS-30353 / JAHL-30353-1 3
第1版(ORIGINAL DATE): 14/MAY/2015
尺度(SCALE): 5:1
シリーズ(SERIES): DX07
日本航空電子工業株式会社
JAPAN AVIATION ELECTRONICS INDUSTRY, LTD.
名称(TITLE): DX07S024JJ2
製図 DR.
担当 CHK.: K. UEDA
査閲 APPD.: —
承認 APPD.: Y. SAITOU
一般公差(GENERAL TOLERANCE)
寸法(DIMENSION): . ±0.8 / .× ±0.4 / .×× ±0.1 / .××× ±
角度(ANGLES): ×° ± / ×°×' ±
単位(UNIT): mm
質量(MASS)
図面番号(DRAWING NO.): SJ115946
SIZE A2
版数(VER.): 3

JAE-CONNECTOR.COM
Reference Only

JAE Connector DIV. Proprietary.Copyright(C) 2015, Japan Aviation Electronics Industry, LTD.

DCF-C-213H(12.08)