MICRO SWITCH
FREEPORT, ILLINOIS, U.S.A.
A DIVISION OF HONEYWELL
FED. MFG. CODE 91929

SWITCH-ENCLOSED

CATALOG LISTING
1LN4-5-RH

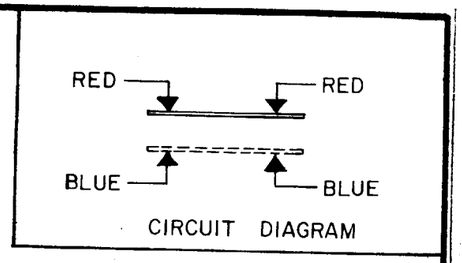

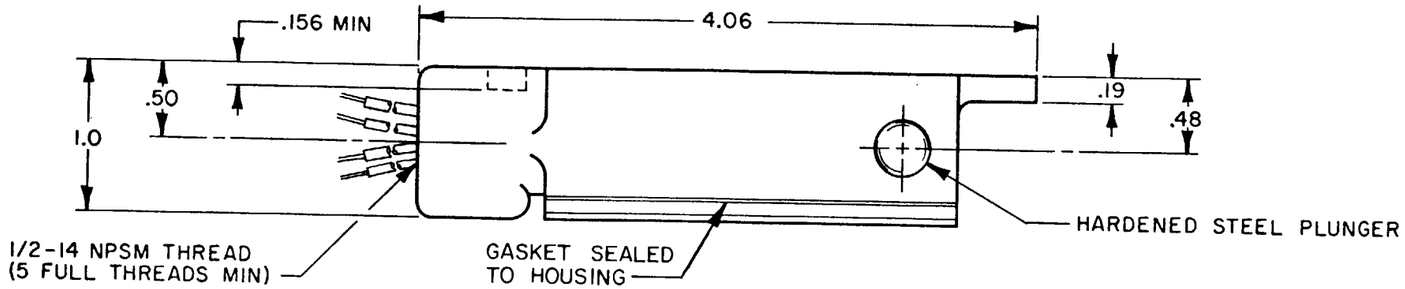

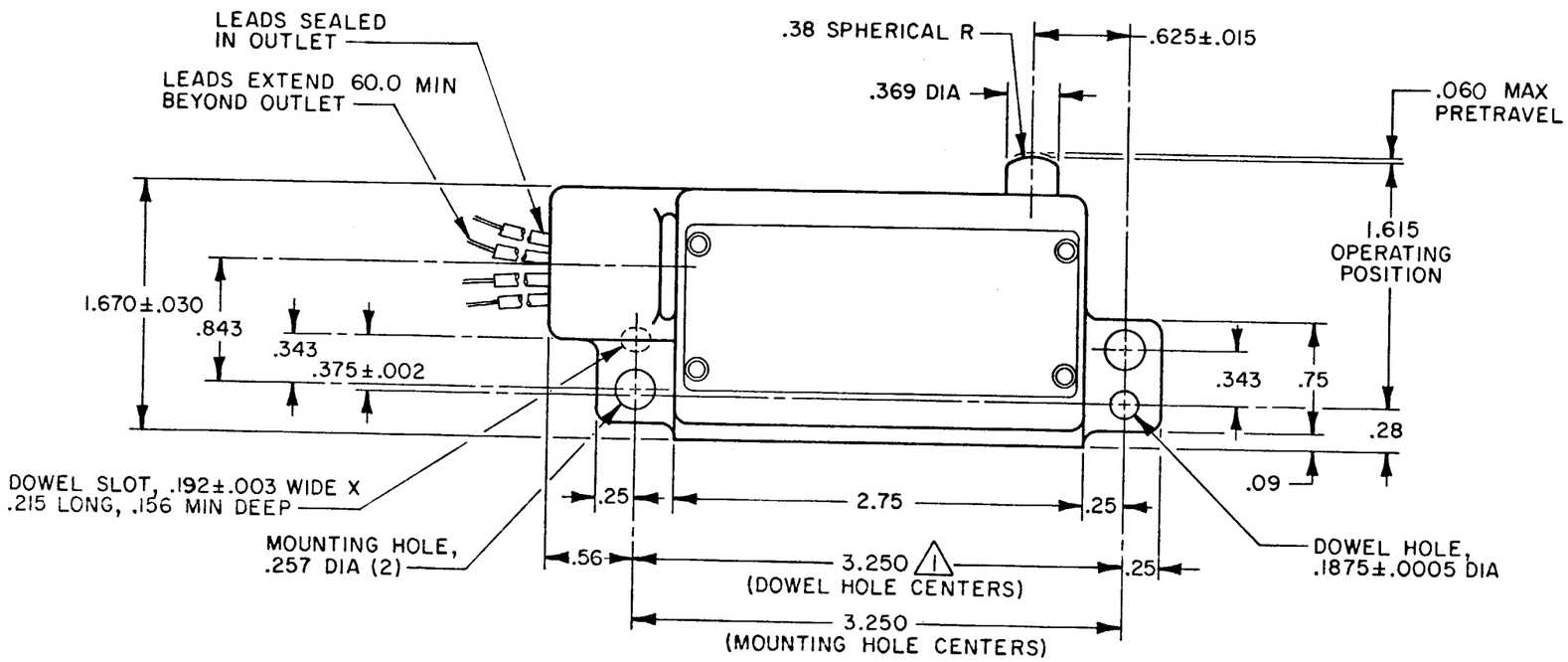

NOTE
1 DOWEL HOLES WILL ACCEPT .187 MAX DIA
DOWEL PINS ON 3.250 X .375±.002 CENTERS

THIS DRAWING COVERS A PROPRIETARY ITEM AND IS THE PROPERTY OF MICRO SWITCH, A DIVISION OF HONEYWELL. THIS DRAWING IS NOT TO BE COPIED OR USED WITHOUT THE APPROVAL OF MICRO SWITCH.

CHARACTERISTICS	
OPERATING FORCE	6 LB MAX
RELEASE FORCE	1 LB MIN
DIFFERENTIAL TRAVEL	.030 MAX
OVERTRAVEL	.172 MIN

ELECTRICAL DATA

CONTACT ARRANGEMENT
(SEE CIRCUIT DIAGRAM)

10A-125 OR 250 VAC
1/2 HP-125 VAC
L 25

SCALE FULL

DO NOT SCALE PRINT

TOLERANCES
APPLY TO DESIGN UNITS. CONVERSIONS ARE ONLY FOR REFERENCE. UNLESS NOTED, TOLERANCES ARE ±

	DIM. mm	TOL. mm/in	DIM. in	TOL. mm/in
NO PLACES	X	1/04		
ONE PLACE	X.X	0.4/.016	X.X	0.8/.03
TWO PLACES	X.XX	0.15/.006	X.XX	0.38/.015
THREE PLACES			X.XXX	0.13/.005
ANGLES				

DESIGN UNITS: SI METRIC ☐ US CUSTOMARY ■

THIRD ANGLE PROJECTION

WEIGHT

1LN4-5-RH

REPLACES

RELEASE NO. PR-9787

DRAWING NUMBER M

ISSUE 5

CHECK

REVISIONS
A PR9787 WJM 2 FEB 81
B C054996 J A P 27 APR 84

CHECK

2 FEB 81

CE 3

CHECK

30 JAN 81

DRAWN WJM

FO-32851-B