19-3305; Rev 1; 8/04

Automatic PWM Fan-Speed Controllers with Overtemperature Output

MAX6643/MAX6644/MAX6645

General Description

The MAX6643/MAX6644/MAX6645 monitor temperature and automatically adjust fan speed to ensure optimum cooling while minimizing acoustic noise from the fan. Each device measures two temperature locations.

The MAX6643/MAX6644/MAX6645 generate a PWM waveform that drives an external power transistor, which in turn modulates the fan's power supply. The MAX6643/MAX6644/MAX6645 monitor temperature and adjust the duty cycle of the PWM output waveform to control the fan's speed according to the cooling needs of the system. The MAX6643 monitors its own die temperature and an optional external transistor's temperature, while the MAX6644 and MAX6645 each monitor the temperatures of one or two external diode-connected transistors.

The MAX6643/MAX6644/MAX6645 are available in H and L versions. The H versions are trimmed for higher temperature trip thresholds than the L versions. The MAX6643 and MAX6644 have nine selectable trip temperatures (in 5°C increments). The MAX6645 is factory programmed and is not pin selectable.

All versions include an overtemperature output ($\overline{OT}$). $\overline{OT}$ can be used for warning or system shutdown. The MAX6643 also features a FULLSPD input that forces the PWM duty cycle to 100%. The MAX6643/MAX6644/MAX6645 also feature a $\overline{FANFAIL}$ output that indicates a failed fan. See the *Selector Guide* for a complete list of each device's functions.

The MAX6643 and MAX6644 are available in a small 16-pin QSOP package and the MAX6645 is available in a 10-pin µMAX® package. All versions operate from 3.0V to 5.5V supply voltages and consume 500µA (typ) supply current.

Applications

Networking Equipment

Storage Equipment

Servers

Desktop Computers

Workstations

Pin Configurations, Typical Operating Circuit, and Selector Guide appear at end of data sheet.

µMAX is a registered trademark of Maxim Integrated Products, Inc.

Features

- **Simple, Automatic Fan-Speed Control**
- **Internal and External Temperature Sensing**
- **Detect Fan Failure Through Locked-Rotor Output, Tachometer Output, or Fan-Supply Current Sensing**
- **Multiple, 1.6% Output Duty-Cycle Steps for Low Audibility of Fan-Speed Changes**
- **Pin-Selectable or Factory-Selectable Low-Temperature Fan Threshold**
- **Pin-Selectable or Factory-Selectable High-Temperature Fan Threshold**
- **Spin-Up Time Ensures Fan Start**
- **Fan-Start Delay Minimizes Power-Supply Load at Power-Up**
- **32Hz PWM Output**
- **Controlled Duty-Cycle Rate-of-Change Ensures Good Acoustic Performance**
- **2°C Temperature-Measurement Accuracy**
- **$\overline{FULLSPD}$/FULLSPD Input Sets PWM to 100%**
- **Pin-Selectable $\overline{OT}$ Output Threshold**
- **16-Pin QSOP and 10-Pin µMAX Packages**

Ordering Information

PART	TEMP RANGE	PIN-PACKAGE
MAX6643LBFAEE	-40°C to +125°C	16 QSOP
MAX6643LAFAEE*	-40°C to +125°C	16 QSOP
MAX6643LBBAEE	-40°C to +125°C	16 QSOP
MAX6643LABAEE*	-40°C to +125°C	16 QSOP
MAX6643HAFAEE*	-40°C to +125°C	16 QSOP
MAX6644LBAAEE	-40°C to +125°C	16 QSOP
MAX6644HAFAEE*	-40°C to +125°C	16 QSOP
MAX6645ABFAUB*	-40°C to +125°C	10 µMAX
MAX6645BAFAUB	-40°C to +125°C	10 µMAX

**Future product—contact factory for availability.*

For pricing, delivery, and ordering information, please contact Maxim/Dallas Direct! at 1-888-629-4642, or visit Maxim's website at www.maxim-ic.com.

Automatic PWM Fan-Speed Controllers with Overtemperature Output

ABSOLUTE MAXIMUM RATINGS

V_{DD} to GND .....-0.3V to +6V
PWM_OUT, $\overline{OT}$, and $\overline{FANFAIL}$ to GND.....-0.3V to +6V
FAN_IN1 and FAN_IN2 to GND.....-0.3V to +13.2V
DXP_ to GND.....-0.3V to +0.8V
FULLSPD, $\overline{FULLSPD}$, TH_, TL_, TACHSET,
and OT_ to GND .....-0.3V to +(V_{DD} + 0.3V)
$\overline{FANFAIL}$, $\overline{OT}$ Current.....-1mA to +50mA

Continuous Power Dissipation (T_A = +70°C)
10-Pin µMAX (derate 5.6mW/°C above +70°C) 444mW
16-Pin QSOP (derate 8.3mW/°C above +70°C)..... 667mW
Operating Temperature Range .....-40°C to +125°C
Junction Temperature.....+150°C
Storage Temperature Range .....-65°C to +150°C
Lead Temperature (soldering, 10s) .....+300°C

Stresses beyond those listed under "Absolute Maximum Ratings" may cause permanent damage to the device. These are stress ratings only, and functional operation of the device at these or any other conditions beyond those indicated in the operational sections of the specifications is not implied. Exposure to absolute maximum rating conditions for extended periods may affect device reliability.

ELECTRICAL CHARACTERISTICS

(V_{DD} = +3.0V to +5.5V, T_A = -40°C to +125°C, unless otherwise noted. Typical values are at V_{DD} = +3.3V, T_A = +25°C.) (Note 1)

PARAMETER	SYMBOL	CONDITIONS		MIN	TYP	MAX	UNITS
Operating Supply Voltage Range	V_{DD}			+3.0		+5.5	V
Remote Temperature Error		V_{DD} = +3.3V, +20°C ≤ T_{RJ} ≤ +100°C	T_A = +20°C to +60°C			±2	°C
			T_A = 0°C to +125°C			±3	
Local Temperature Error		V_{CC} = +3.3V	T_A = +10°C to +70°C			±2.5	°C
			T_A = 0°C to +125°C			±3.5	
Temperature Error from Supply Sensitivity					±0.2		°C/V
Power-On-Reset (POR) Threshold		V_{DD} falling edge		1.5	2.0	2.5	V
POR Threshold Hysteresis					90		mV
Operating Current	I_S	During a conversion			0.5	1	mA
Average Operating Current		Duty cycle = 50%, no load				0.5	mA
Remote-Diode Sourcing Current		High level		80	100	120	µA
Conversion Time					125		ms
Spin-Up Time		MAX664_ _A_ _ _ _			2.5		s
		MAX664_ _B_ _ _ _			8		
Startup Delay		MAX664_ _A_ _ _ _			2.5		s
		MAX664_ _B_ _ _ _			0.5		
Minimum Fan-Fail Tachometer Frequency					16		Hz
PWM_OUT Frequency	F_{PWM_OUT}				32		Hz
DIGITAL OUTPUTS ($\overline{OT}$, $\overline{FANFAIL}$, PWM_OUT)							
Output Low Voltage ($\overline{OT}$)	V_{OL}	I_{SINK} = 1mA				0.4	V
Output Low Voltage ($\overline{FANFAIL}$, PWM_OUT)	V_{OL}	I_{SINK} = 6mA				0.5	V
		I_{SINK} = 1mA				0.4	
Output-High Leakage Current	I_{OH}	V_{OH} = 3.3V				1	µA

ELECTRICAL CHARACTERISTICS (continued)

(V_{DD} = +3.0V to +5.5V, T_A = -40°C to +125°C, unless otherwise noted. Typical values are at V_{DD} = +3.3V, T_A = +25°C.) (Note 1)

PARAMETER	SYMBOL	CONDITIONS	MIN	TYP	MAX	UNITS
DIGITAL INPUTS ($\overline{\text{FULLSPD}}$, FULLSPD, TACHSET)						
Logic-Input High	V_{IH}	V_{DD} = 5.5V	3.65			V
		V_{DD} = 3.0V	2.2			
Logic-Input Low	V_{IL}	V_{DD} = 3.0V			0.8	V
Input Leakage Current		V_{IN} = GND or V_{DD}	-1		+1	µA

Note 1: All parameters tested at T_A = +25°C. Specifications over temperature are guaranteed by design.

Typical Operating Characteristics

(T_A = +25°C, unless otherwise noted.)

OPERATING SUPPLY CURRENT vs. SUPPLY VOLTAGE

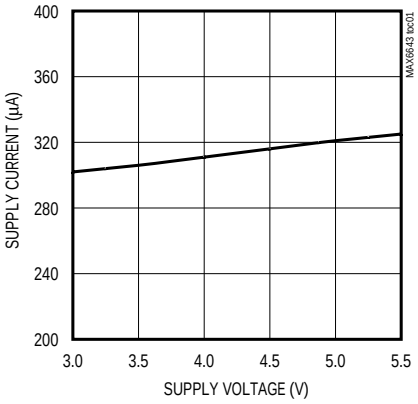

PWMOUT FREQUENCY vs. DIE TEMPERATURE

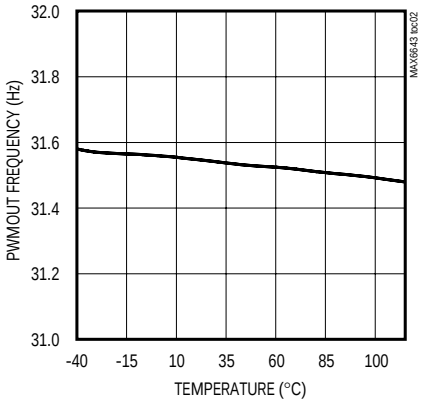

PWMOUT FREQUENCY vs. SUPPLY VOLTAGE

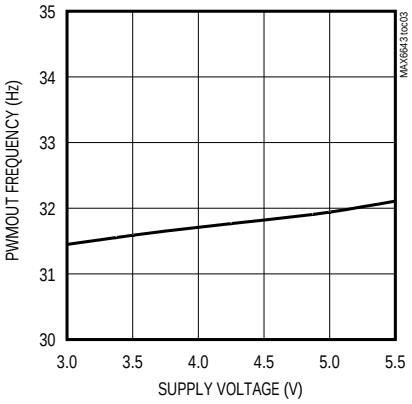

TRIP-THRESHOLD ERROR vs. TRIP TEMPERATURE

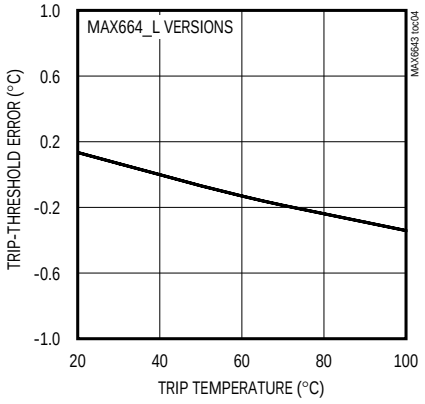

Automatic PWM Fan-Speed Controllers with Overtemperature Output

Pin Description

PIN				NAME	FUNCTION
MAX6643_A	MAX6643_B	MAX6644_	MAX6645_		
1, 15	1, 15	1, 15	—	TH1, TH2	High-Temperature Threshold Inputs. Connect to V_{DD}, GND, or leave unconnected to select the upper fan-control trip temperature (T_{HIGH}), in 5°C increments. See Table 1.
2, 3	2, 3	2, 3	—	TL2, TL1	Low-Temperature Threshold Inputs. Connect to V_{DD}, GND, or leave unconnected to select the lower fan-control trip temperature (T_{LOW}), in 5°C increments. See Table 2.
4	4	4	1	$\overline{FANFAIL}$	Fan-Fail Alarm Output. $\overline{FANFAIL}$ is an active-low, open-drain output. If the FAN_IN_ detects a fan failure, the $\overline{FANFAIL}$ output asserts low.
5	5	5	2	TACHSET	FAN_IN_ Control Input. TACHSET controls what type of fan-fail condition is being detected. Connect TACHSET to V_{DD}, GND, or leave floating to set locked rotor, current sense, or tachometer configurations (see Table 3).
—	6	—	—	FULLSPD	Active-High Logic Input. When pulled high, the fan runs at 100% duty cycle.
6	—	—	—	$\overline{FULLSPD}$	Active-Low Logic Input. When pulled low, the fan runs at 100% duty cycle.
7	7	7	4	GND	Ground
8	8	—	—	DXP	Combined Current Source and A/D Positive Input for Remote Diode. Connect to anode of remote diode-connected temperature-sensing transistor. Connect to GND if no remote diode is used. Place a 2200pF capacitor between DXP_ and GND for noise filtering.
—	—	6, 8	3, 5	DXP2, DXP1	
9	9	9	6	$\overline{OT}$	Active-Low, Open-Drain Overtemperature Output. When $\overline{OT}$ threshold is exceeded, $\overline{OT}$ pulls low.
10, 11	10, 11	10, 11	7, 8	FAN_IN2, FAN_IN1	Fan-Sense Input. FAN_IN_ can be configured to monitor either a fan's logic-level locked-rotor output, tachometer output, or sense-resistor waveform to detect fan failure. The MAX6643's FAN_IN_ input can monitor only tachometer signals. The MAX6644 and the MAX6645 can monitor any one of the three signal types as configured using the TACHSET input.

Pin Description (continued)

PIN				NAME	FUNCTION
MAX6643_A	MAX6643_B	MAX6644_	MAX6645_		
12	12	12	9	PWM_OUT	PWM Output for Driving External Power Transistor. Connect to the gate of an n-channel MOSFET or to the base of an npn. PWMOUT requires a pullup resistor. The pullup resistor can be connected to a supply voltage as high as 5.5V, regardless of the supply voltage.
13, 14	13, 14	13, 14	—	OT2, OT1	Overtemperature Threshold Inputs. Connect to V_{DD}, GND, or leave unconnected to select the upper-limit $\overline{OT}$ fault output trip temperature, in 5°C increments. See Table 4.
16	16	16	10	V_{DD}	Power-Supply Input. 3.3V nominal. Bypass V_{DD} to GND with a 0.1µF capacitor.

Detailed Description

The MAX6643/MAX6644/MAX6645 measure temperature and automatically adjust fan speed to ensure optimum cooling while minimizing acoustic noise from the fan.

The MAX6643/MAX6644/MAX6645 generate a PWM waveform that drives an external power transistor, which in turn modulates the fan's power supply. The MAX6643/MAX6644/MAX6645 monitor temperature and adjust the duty cycle of the PWM output waveform to control the fan's speed according to the cooling needs of the system. The MAX6643 monitors its own die temperature and an optional external transistor's temperature, while the MAX6644 and MAX6645 each monitor the temperatures of one or two external diode-connected transistors.

Temperature Sensor

The pn junction-based temperature sensor can measure temperatures up to two pn junctions. The MAX6643 measures the temperature of an external diode-connected transistor, as well as its internal temperature. The MAX6644 and MAX6645 measure the temperature of two external diode-connected transistors. The temperature is measured at a rate of 1Hz.

If an external "diode" pin is shorted to ground or left unconnected, the temperature is read as 0°C. Since the larger of the two temperatures prevails, a faulty or unconnected diode is not used for calculating fan speed or determining overtemperature faults.

PWM Output

The larger of the two measured temperatures is always used for fan control. The temperature is compared to three thresholds: the high-temperature threshold (T_{HIGH}), the low-temperature threshold (T_{LOW}), and the overtemperature threshold, $\overline{OT}$. The $\overline{OT}$ comparison is done once per second, whereas the comparisons with fan-control thresholds T_{HIGH} and T_{LOW} are done once every 4s.

The duty-cycle variation of PWM_OUT from 0% to 100% is divided into 64 steps. If the temperature measured exceeds the threshold T_{HIGH}, the PWM_OUT duty cycle is incremented by one step, i.e., approximately 1.5% (100/64). Similarly, if the temperature measured is below the threshold T_{LOW}, the duty cycle is decremented by one step (1.5%). Since the T_{HIGH} and T_{LOW} comparisons are done only once every 4s, the maximum rate of change of duty cycle is 0.4% per second.

Tables 1 and 2 show the °C value assigned to the TH_ and TL_ input combinations.

Table 1. Setting T_{HIGH} (MAX6643 and MAX6644)

TH2	TH1	T_{HIGH} (°C) L SUFFIX	T_{HIGH} (°C) H SUFFIX
0	0	20	40
0	High-Z	25	45
0	1	30	50
High-Z	0	35	55
High-Z	High-Z	40	60
High-Z	1	45	65
1	0	50	70
1	High-Z	55	75
1	1	60	80

High-Z = High impedance.

Table 2. Setting T_{LOW} (MAX6643 and MAX6644)

TL2	TL1	T_{LOW} (°C) L SUFFIX	T_{LOW} (°C) H SUFFIX
0	0	15	35
0	High-Z	20	40
0	1	25	45
High-Z	0	30	50
High-Z	High-Z	35	55
High-Z	1	40	60
1	0	45	65
1	High-Z	50	70
1	1	55	75

High-Z = High impedance.

There are two options for the behavior of the PWM outputs at power-up. Option 1 (minimum duty cycle = 0): at power-up, the PWM duty cycle is zero. Option 2 (minimum duty cycle = the start duty cycle): at power-up, there is a startup delay, after which the duty cycle goes to 100% for the spin-up period. After the startup delay and spin-up, the duty cycle drops to its minimum value. The minimum duty cycle is in the 0% to 50% range (see the *Selector Guide*).

To control fan speed based on temperature, T_{HIGH} is set to the temperature beyond which the fan should spin at 100%. T_{LOW} is set to the temperature below which the duty cycle can be reduced to its minimum value. After power-up and spin-up (if applicable), the duty cycle reduces to its minimum value (either 0% or the start duty cycle). For option 1 (minimum duty cycle = 0), if the measured temperature remains below T_{HIGH}, the duty cycle remains at zero (see Figure 1). If the temperature increases above T_{HIGH}, the duty cycle goes to 100% for the spin-up period, and then goes to the start duty cycle (for example, 40%). If the measured temperature remains above T_{HIGH} when temperature is next measured (4s later), the duty cycle begins to increase, incrementing by 1.5% every 4s until the fan is spinning fast enough to reduce the temperature below T_{HIGH}.

For option 2 (minimum duty cycle = start duty cycle), if the measured temperature remains below T_{HIGH}, the duty cycle does not increase and the fan continues to run at a slow speed. If the temperature increases above T_{HIGH}, the duty cycle begins to increase, incrementing by 1.5% every 4s until the fan is spinning fast enough to reduce the temperature below T_{HIGH} (see Figure 2). In both cases, if only a small amount of extra cooling is necessary to reduce the temperature below

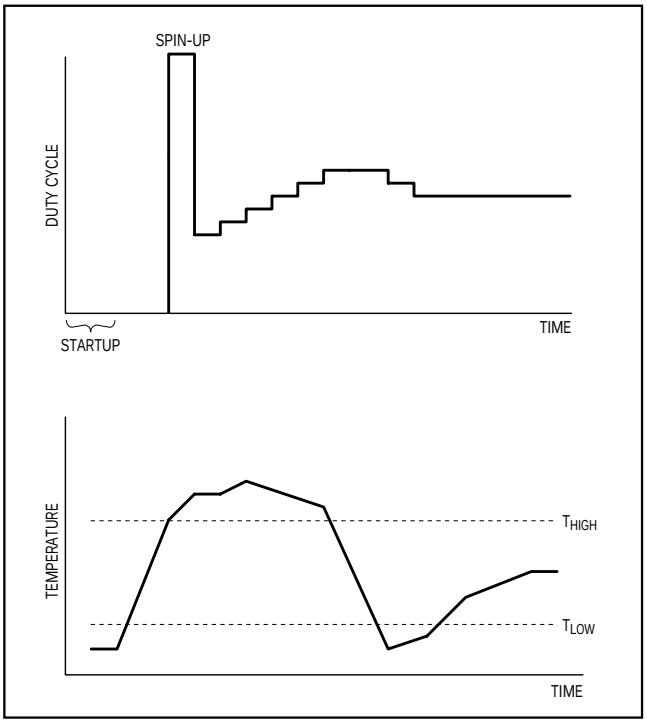

Figure 1. Temperature-Controlled Duty-Cycle Change with Minimum Duty Cycle 30%

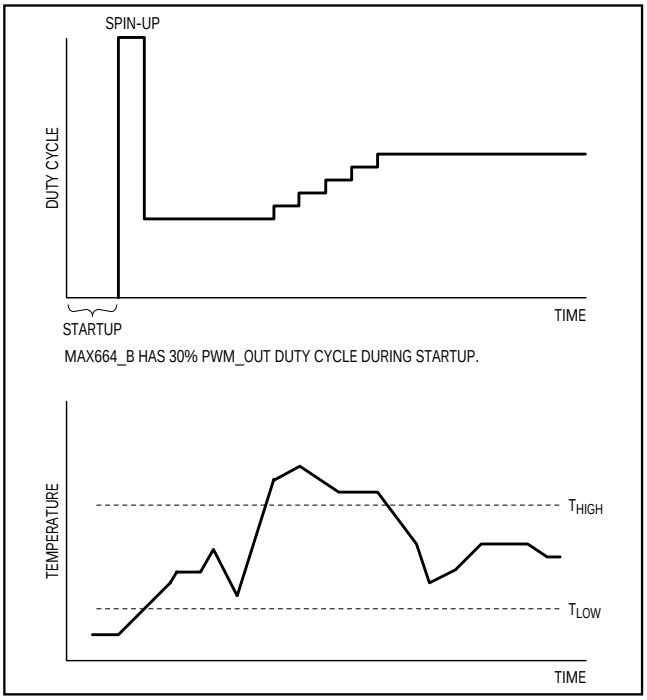

Figure 2. Temperature-Controlled Duty-Cycle Change with Minimum Duty Cycle 30%

T_{HIGH}, the duty cycle may increase just a few percent above the minimum duty cycle. If the power dissipation or ambient temperature increases to a high-enough value, the duty cycle may eventually need to increase to 100%.

If the ambient temperature or the power dissipation reduces to the point that the measured temperature is less than T_{LOW}, the duty cycle begins slowly decrementing until either the duty cycle reaches its minimum value or the temperature rises above T_{LOW}.

The small duty-cycle increments and slow rate-of-change of duty cycle (1.5% maximum per 4s) reduce the likelihood that the process of fan-speed control is acoustically objectionable. The "dead band" between T_{LOW} and T_{HIGH} keeps the fan speed constant when the temperature is undergoing small changes, thus making the fan-control process even less audible.

Fan-Fail Sensing

The MAX6643/MAX6644/MAX6645 feature a $\overline{\text{FANFAIL}}$ output. The $\overline{\text{FANFAIL}}$ output is an active-low, open-drain alarm. The MAX6643/MAX6644/MAX6645 detect fan failure either by measuring the fan's speed and recognizing when it is too low, or by detecting a locked-rotor logic signal from the fan. Fan-failure detection is enabled only when the duty cycle of the PWM drive signal is equal to 100%. This happens during the spin-up period when the fan first turns on and whenever the temperature is above T_{HIGH} long enough that the duty cycle reaches 100%.

Many fans have open-drain tachometer outputs that produce periodic pulses (usually two pulses per revolution) as the fan spins. These tachometer pulses are monitored by the FAN_IN_ inputs to detect fan failures. If a 2-wire fan with no tachometer output is used, the fan's speed can be monitored by using an external sense resistor at the source of the driving FET (see Figure 3). In this manner, the variation in the current flowing through the fan develops a periodic voltage waveform across the sense resistor. This periodic waveform is then highpass filtered and AC-coupled to the FAN_IN input. Any variations in the waveform that have an amplitude of more than ±150mV are converted to digital pulses. The frequency of these digital pulses is directly related to the speed of the rotation of the fan and can be used to detect fan failure.

Note that the value of the sense resistor must be matched to the characteristics of the fan's current waveform. Choose a resistor that produces voltage variations of at least ±200mV to ensure that the fan's operation can be reliably detected. Note that while most fans have current waveforms that can be used with this detection method, there may be some that do not produce reliable tachometer signals. If a 2-wire fan is to be used with fault detection, be sure that the fan is compatible with this technique.

To detect fan failure, the analog sense-conditioned pulses or the tachometer pulses are deglitched and counted for 2s while the duty cycle is 100% (either during spin-up or when the duty cycle rises to 100% due to measured temperature). If more than 32 pulses are counted (corresponding to 480rpm for a fan that produces two pulses per revolution), the fan is assumed to be functioning normally. If fewer than 32 pulses are received, the $\overline{\text{FANFAIL}}$ output is enabled and the PWM duty cycle to the FET transistor is either shut down in case of a single-fan (MAX6643) configuration or continues normal operation in case of a dual-fan configuration (MAX6644/MAX6645).

Some fans have a locked-rotor logic output instead of a tachometer output. If a locked-rotor signal is to be used to detect fan failure, that signal is monitored for 2s while the duty cycle is 100%. If a locked-rotor signal remains active (low) for more than 2s, the fan is assumed to have failed.

The MAX6643/MAX6644/MAX6645 have two channels for monitoring fan-failure signals, FAN_IN1 and FAN_IN2. For the MAX6643, the FAN_IN_ channels monitor a tachometer. The MAX6643's fault sensing can also be turned off by floating the TACHSET input.

For the MAX6644 and MAX6645, the FAN_IN1 and FAN_IN2 channels can be configured to monitor either a logic-level tachometer signal, the voltage waveform on a current-sense resistor, or a locked-rotor logic signal. The TACHSET input selects which type of signal is to be monitored (see Table 3). To disable fan-fault sensing, TACHSET should be unconnected and FAN_IN1 and FAN_IN2 should be connected to V_{DD}.

$\overline{\textbf{OT}}$ *Output*

The MAX6643/MAX6644/MAX6645 include an overtemperature output that can be used as an alarm or a system-shutdown signal. Whenever the measured temperature exceeds the value selected using the OT programming inputs OT1 and OT2 (see Table 4), $\overline{\text{OT}}$ is asserted. $\overline{\text{OT}}$ deasserts only after the temperature drops below the threshold.

$\overline{\textbf{FULLSPD}}$ *Input*

The MAX6643_A_ features a $\overline{\text{FULLSPD}}$ input. Pulling $\overline{\text{FULLSPD}}$ low forces PWM_OUT to 100% duty cycle. The $\overline{\text{FULLSPD}}$ input allows a microcontroller to force the fan to full speed when necessary. It also allows a $\overline{\text{FANFAIL}}$ output to force other fans to 100% in multifan

Table 3. Configuring the FAN_IN_ Inputs with TACHSET

TACHSET	VDD		GND		UNCONNECTED	
	FAN_IN1	FAN_IN2	FAN_IN1	FAN_IN2	FAN_IN1	FAN_IN2
MAX6643_A_	Tachometer	Tachometer	Do not connect to GND	Do not connect to GND	Disables fan-failure detection	Disables fan-failure detection
MAX6644_A_	Tachometer	Tachometer	Current sense	Current sense	Locked rotor	Locked rotor
MAX6645_A_	Tachometer	Tachometer	Current sense	Current sense	Locked rotor	Locked rotor
MAX6643_B_	Tachometer	Tachometer	Do not connect to GND	Do not connect to GND	Disables fan-failure detection	Disables fan-failure detection
MAX6644_B_	Tachometer	Tachometer	Current sense	Current sense	Locked rotor	Locked rotor
MAX6645_B_	Tachometer	Tachometer	Current sense	Current sense	Locked rotor	Locked rotor

Table 4. Setting the Overtemperature Thresholds (T_{OVERT}) (MAX6643 and MAX6644)

OT2	OT1	T_{OVERT} (°C) L SUFFIX	T_{OVERT} (°C) H SUFFIX
0	0	60	80
0	High-Z	65	85
0	1	70	90
High-Z	0	75	95
High-Z	High-Z	80	100
High-Z	1	85	105
1	0	90	110
1	High-Z	95	115
1	1	100	120

High-Z = High impedance

systems, or for an over-temperature condition (by connecting $\overline{OT}$ to $\overline{FULLSPD}$).

FULLSPD Input

The MAX6643_B_ features a FULLSPD input. Pulling FULLSPD high forces PWM_OUT to 100% duty cycle. The FULLSPD input allows a microcontroller to force the fan to full speed when necessary. By connecting $\overline{FANFAIL}$ to an inverter, the MAX6643_B_ can force other fans to 100% in multifan systems, or for an over-temperature condition (by connecting $\overline{OT}$ inverter to FULLSPD).

Applications Information

Figures 3–6 show various configurations.

Remote-Diode Considerations

When using an external thermal diode, temperature accuracy depends upon having a good-quality, diode-connected, small-signal transistor. Accuracy has been experimentally verified for a variety of discrete small-signal transistors, some of which are listed in Table 5. The MAX6643/MAX6644/MAX6645 can also directly measure the die temperature of CPUs and other ICs with on-board temperature-sensing diodes.

Table 5. Remote-Sensor Transistor Manufacturers

MANUFACTURER	MODEL NO.
Central Semiconductor (USA)	CMPT3906
Rohm Semiconductor (USA)	SST3906
Samsung (Korea)	KST3906-TF
Siemens (Germany)	SMBT3906

The transistor must be a small-signal type with a relatively high forward voltage. This ensures that the input voltage is within the ADC input voltage range. The forward voltage must be greater than 0.25V at 10µA at the highest expected temperature. The forward voltage must be less than 0.95V at 100µA at the lowest expected temperature. The base resistance has to be less than 100Ω. Tight specification of forward-current gain (+50 to +150, for example) indicates that the manufacturer has good process control and that the devices have consistent characteristics.

Effect of Ideality Factor

The accuracy of the remote temperature measurements depends on the ideality factor (n) of the remote diode (actually a transistor). The MAX6643/MAX6644/MAX6645 are optimized for n = 1.01, which is typical of many discrete 2N3904 and 2N3906 transistors. It is also near the ideality factors of many widely available CPUs, GPUs, and FPGAs. However, any time a sense transistor with a different ideality factor is used, the output data is different. Fortunately, the difference is predictable.

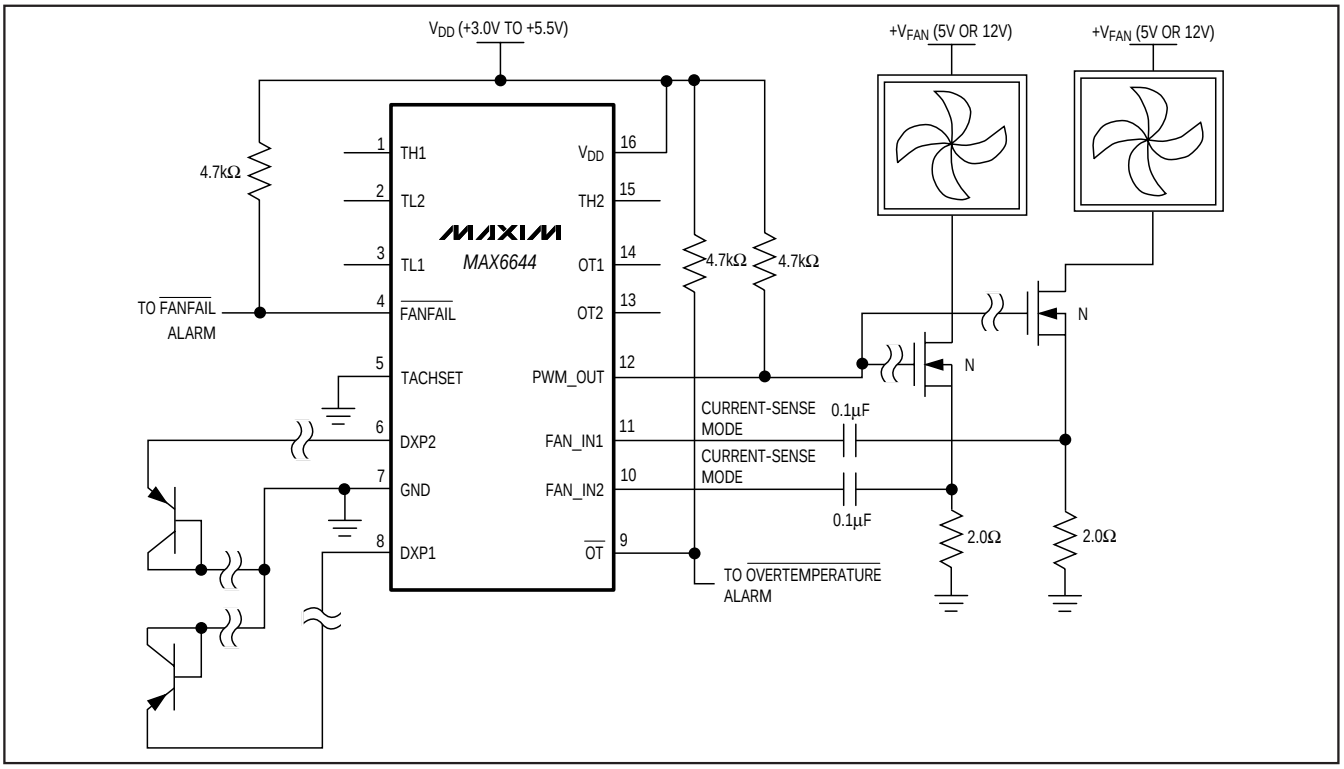

Figure 3. MAX6644 Using Two External Transistors to Measure Remote Temperatures and Control Two 2-Wire Fans. The fan's power-supply current is monitored to detect failure of either fan. Connect pin 10 to pin 11 if only one fan is used.

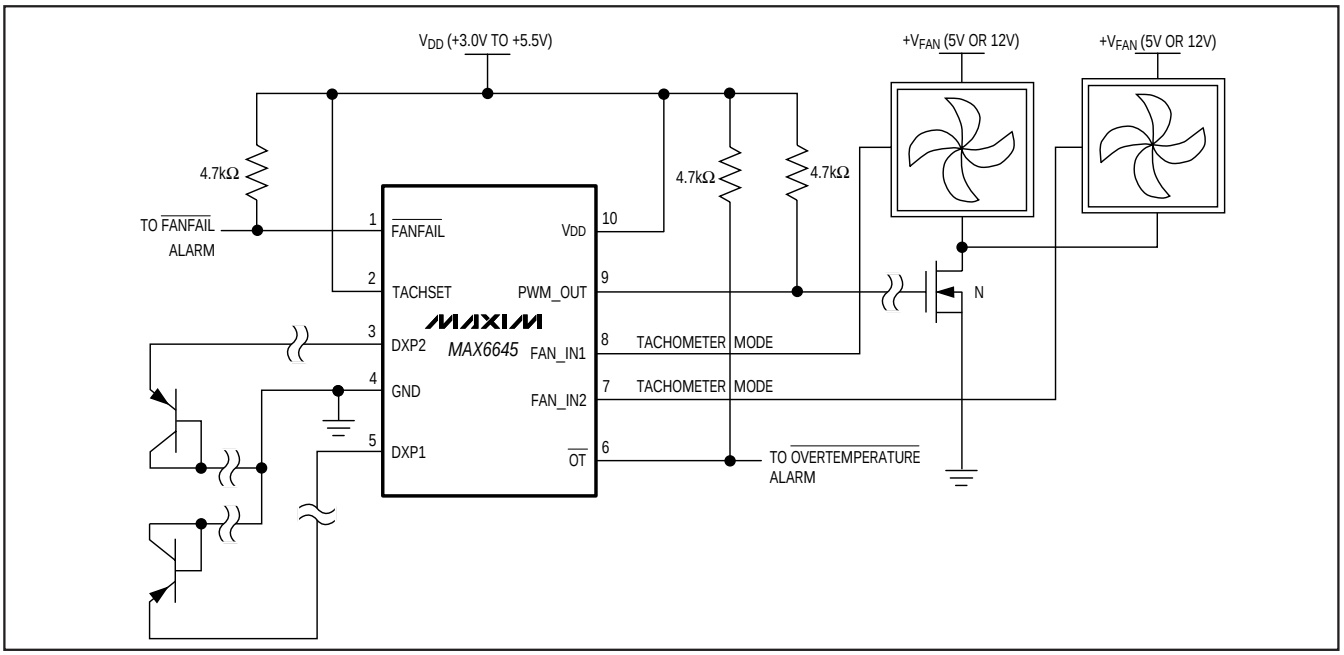

Figure 4. MAX6645 Using Two External Transistors to Measure Remote Temperatures and Control Two 2-Wire Cooling Fans. The fan's power-supply current is monitored to detect failure of either fan. Connect FAN_IN1 to FAN_IN2 if only one fan is used.

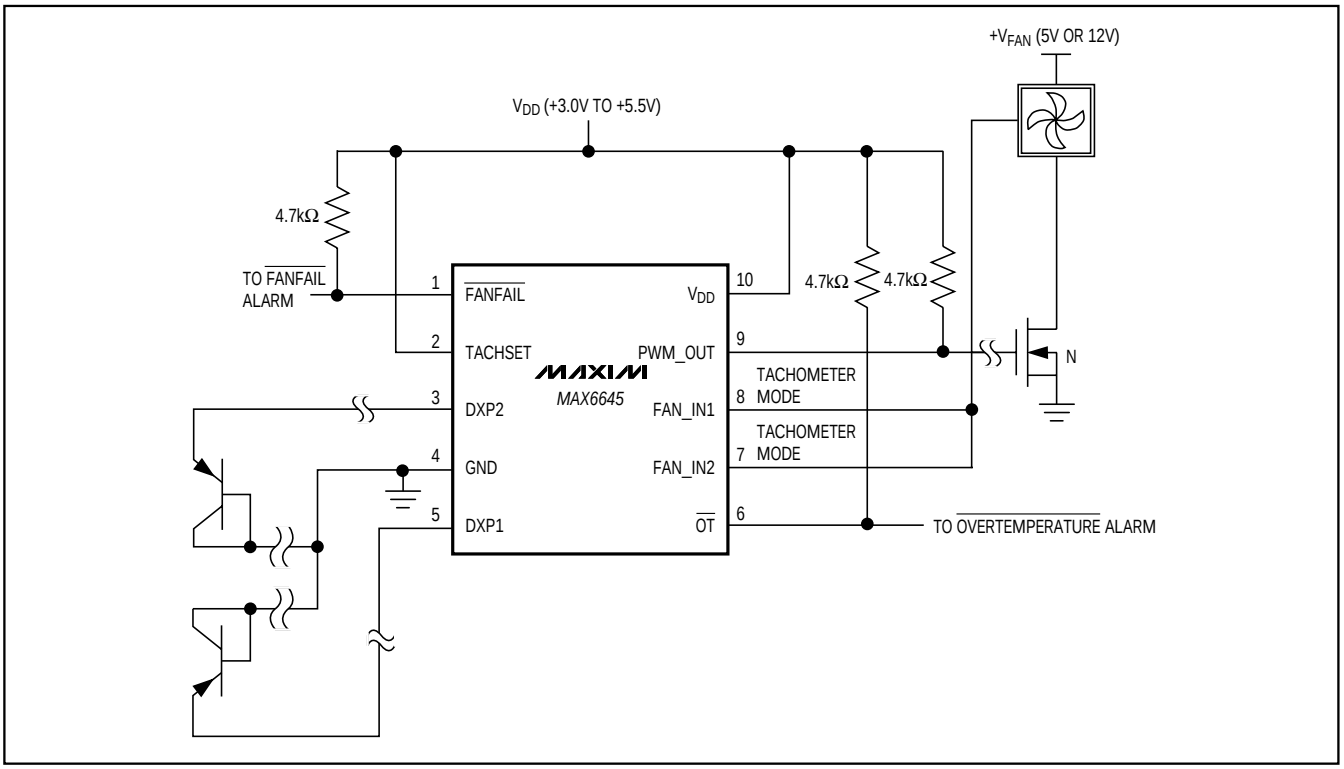

Figure 5. Using the MAX6645 to Monitor Two Fans

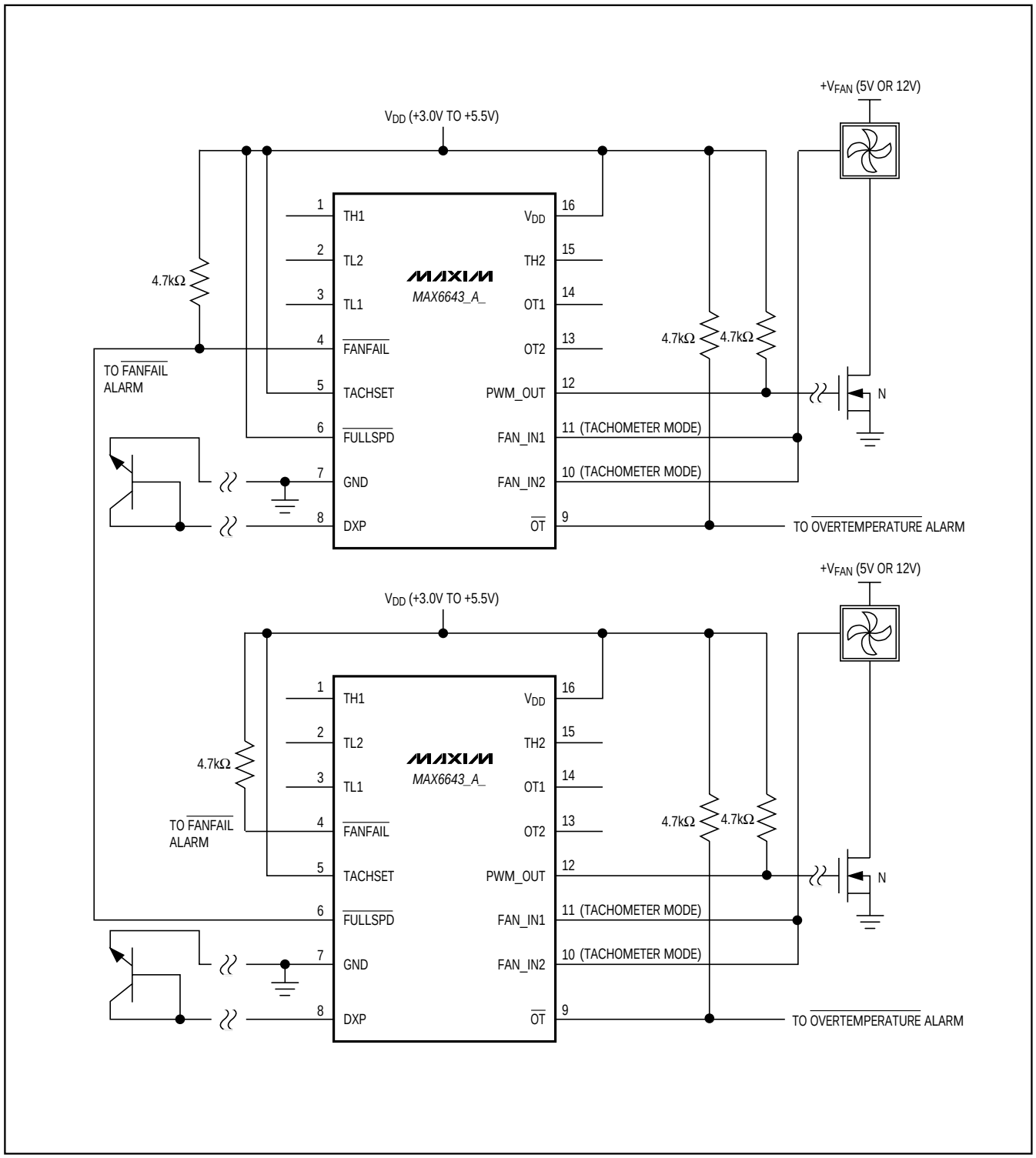

Figure 6. Using Two MAX6643s, Each Controlling a Separate Fan

Automatic PWM Fan-Speed Controllers with Overtemperature Output

Assume a remote-diode sensor designed for a nominal ideality factor $n_{NOMINAL}$ is used to measure the temperature of a diode with a different ideality factor, n_1. The measured temperature T_M can be corrected using:

$$T_M = T_{ACTUAL}\left(\frac{n_1}{n_{NOMINAL}}\right)$$

where temperature is measured in Kelvin.

As mentioned above, the nominal ideality factor of the MAX6643/MAX6644/MAX6645 is 1.01. As an example, assume the MAX6643/MAX6644/MAX6645 are configured with a CPU that has an ideality factor of 1.008. If the diode has no series resistance, the measured data is related to the real temperature as follows:

$$T_{ACTUAL} = T_M\left(\frac{n_{NOMINAL}}{n_1}\right) = T_M\left(\frac{1.01}{1.008}\right) = T_M(1.00198)$$

For a real temperature of +60°C (333.15K), the measured temperature is 59.33°C (332.49K), which is an error of -0.66°C.

Effect of Series Resistance

Series resistance in a sense diode contributes additional errors. For nominal diode currents of 10µA and 100µA, change in the measured voltage is:

$$\Delta V_M = R_S(100\mu A - 10\mu A) = 90\mu A \times R_S$$

Since 1°C corresponds to 198.6µV, series resistance contributes a temperature offset of:

$$\frac{90\frac{\mu V}{\Omega}}{198.6\frac{\mu V}{^\circ C}} = 0.453\frac{^\circ C}{\Omega}$$

Assume that the diode being measured has a series resistance of 3Ω. The series resistance contributes an offset of:

$$3\Omega \times 0.453\frac{^\circ C}{\Omega} = 1.36^\circ C$$

The effects of the ideality factor and series resistance are additive. If the diode has an ideality factor of 1.008 and series resistance of 3Ω, the total offset can be calculated by adding error due to series resistance with error due to ideality factor:

1.36°C - 0.66°C = 0.7°C

for a diode temperature of +60.7°C.

In this example, the effect of the series resistance and the ideality factor partially cancel each other.

For best accuracy, the discrete transistor should be a small-signal device with its collector connected to base, and emitter connected to GND. Table 5 lists examples of discrete transistors that are appropriate for use with the MAX6643/MAX6644/MAX6645.

The transistor must have a relatively high forward voltage; otherwise, the ADC input voltage range can be violated. The forward voltage at the highest expected temperature must be greater than 0.25V at 10µA, and at the lowest expected temperature, the forward voltage must be less than 0.95V at 100µA. Large power transistors must not be used. Also, ensure that the base resistance is less than 100Ω. Tight specifications for forward current gain (50 < ß <150, for example) indicate that the manufacturer has good process controls and that the devices have consistent V_{BE} characteristics.

ADC Noise Filtering

The integrating ADC has inherently good noise rejection, especially of low-frequency signals such as 60Hz/120Hz power-supply hum. Micropower operation places constraints on high-frequency noise rejection. Lay out the PC board carefully with proper external noise filtering for high-accuracy remote measurements in electrically noisy environments.

Filter high-frequency electromagnetic interference (EMI) at the DXP pins with an external 2200pF capacitor connected between DXP, DXP1, or DXP2 and ground. This capacitor can be increased to about 3300pF (max), including cable capacitance. A capacitance higher than 3300pF introduces errors due to the rise time of the switched-current source.

Twisted Pairs and Shielded Cables

For remote-sensor distances longer than 8in, or in particularly noisy environments, a twisted pair is recommended. Its practical length is 6ft to 12ft (typ) before noise becomes a problem, as tested in a noisy electronics laboratory. For longer distances, the best solution is a shielded twisted pair like that used for audio microphones. For example, Belden 8451 works well for distances up to 100ft in a noisy environment. Connect the twisted pair to DXP and GND and the shield to ground, and leave the shield's remote end unterminated. Excess capacitance at DXP limits practical remote-sensor distances (see the *Typical Operating Characteristics*).

For very long cable runs, the cable's parasitic capacitance often provides noise filtering, so the recommended 2200pF capacitor can often be removed or reduced

in value. Cable resistance also affects remote-sensor accuracy. A 1Ω series resistance introduces about +1/2°C error.

PC Board Layout Checklist

1) Place the MAX6643/MAX6644/MAX6645 as close as practical to the remote diode. In a noisy environment, such as a computer motherboard, this distance can be 4in to 8in or more, as long as the worst noise sources (such as CRTs, clock generators, memory buses, and ISA/PCI buses) are avoided.
2) Do not route the DXP lines next to the deflection coils of a CRT. Also, do not route the traces across a fast memory bus, which can easily introduce +30°C error, even with good filtering. Otherwise, most noise sources are fairly benign.
3) Route the DXP and GND traces parallel and close to each other, away from any high-voltage traces such as +12VDC. Avoid leakage currents from PC board contamination. A 20MΩ leakage path from DXP to ground causes approximately +1°C error.
4) Route as few vias and crossunders as possible to minimize copper/solder thermocouple effects.
5) When introducing a thermocouple, make sure that both the DXP and the GND paths have matching thermocouples. In general, PC board-induced thermocouples are not a serious problem. A copper solder thermocouple exhibits 3µV/°C, and it takes approximately 200µV of voltage error at DXP/GN to cause a +1°C measurement error, so most parasitic thermocouple errors are swamped out.
6) Use wide traces. Narrow traces are more inductive and tend to pick up radiated noise. The 10-mil widths and spacings are recommended, but are not absolutely necessary (as they offer only a minor improvement in leakage and noise), but use them where practical.
7) Placing an electrically clean copper ground plane between the DXP traces and traces carrying high-frequency noise signals helps reduce EMI.

Chip Information

TRANSISTOR COUNT: 12,518

PROCESS: BiCMOS

Pin Configurations

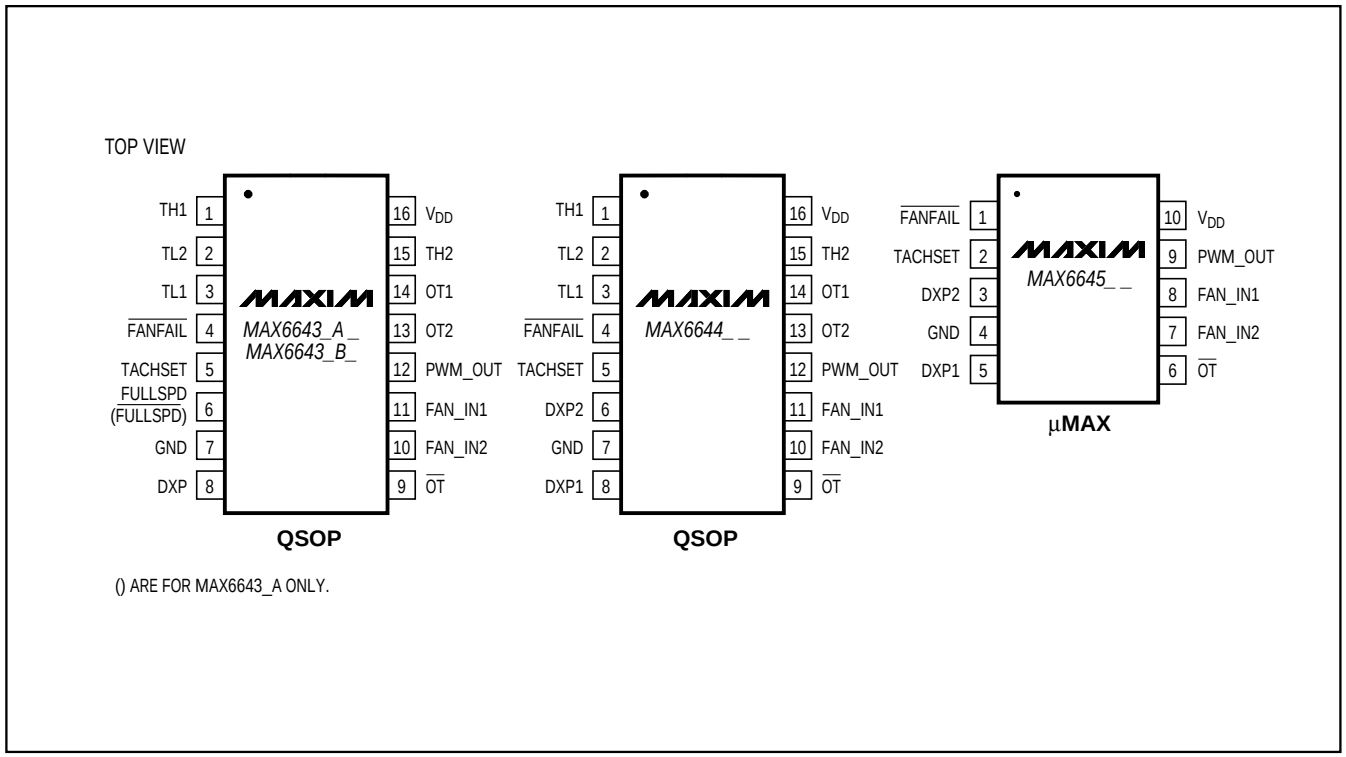

Automatic PWM Fan-Speed Controllers with Overtemperature Output

Selector Guide

PART	PACKAGE-PINS	STARTUP DELAY (s)	SPIN-UP TIME (s)	START DUTY CYCLE (%)	MINIMUM DUTY CYCLE (%)	CHANNELS	TL (°C)	TH (°C)	OT (°C)	FULLSPD POLARITY	FAN_IN1	FAN_IN2
MAX6643 LBFAEE	QSOP-16	0.5	8	40	40	Remote, local	15 to 55	20 to 60	60 to 100	FULLSPD	Tach/off	Tach/off
MAX6643 LAFAEE*	QSOP-16	2.5	2.5	40	40	Remote, local	15 to 55	20 to 60	60 to 100	$\overline{\text{FULLSPD}}$	Tach/off	Tach/off
MAX6643 LBBAEE	QSOP-16	0.5	8	30	30	Remote, local	15 to 55	20 to 60	60 to 100	FULLSPD	Tach/off	Tach/off
MAX6643 LABAEE*	QSOP-16	2.5	2.5	30	30	Remote, local	15 to 55	20 to 60	60 to 100	$\overline{\text{FULLSPD}}$	Tach/off	Tach/off
MAX6643H AFAEE*	QSOP-16	2.5	2.5	40	40	Remote, local	35 to 75	40 to 80	80 to 120	$\overline{\text{FULLSPD}}$	Tach/off	Tach/off
MAX6644 LBAAEE	QSOP-16	0.5	8	30	0	Remote, remote	15 to 55	20 to 60	60 to 100	—	Locked rotor/tach/ current sense	Locked rotor/tach/ current sense
MAX6644H AFAEE*	QSOP-16	2.5	2.5	40	40	Remote, remote	35 to 75	40 to 80	80 to 120	—	Locked rotor/tach/ current sense	Locked rotor/tach/ current sense
MAX6645 AAFAUB*, **	µMAX-10	0.5	8	40	40	Remote, remote	45	50	75	—	Locked rotor/tach/ current sense	Locked rotor/tach/ current sense
MAX6645 BAFAUB**	µMAX-10	2.5	2.5	40	40	Remote, remote	55	65	120	—	Locked rotor/tach/ current sense	Locked rotor/tach/ current sense

**Future product—contact factory for availability.*
***The MAX6645xxxxxx can be ordered with any combination of TL, TH, and OT trip threshold (in 5°C increments) by contacting the factory.*

Block Diagram

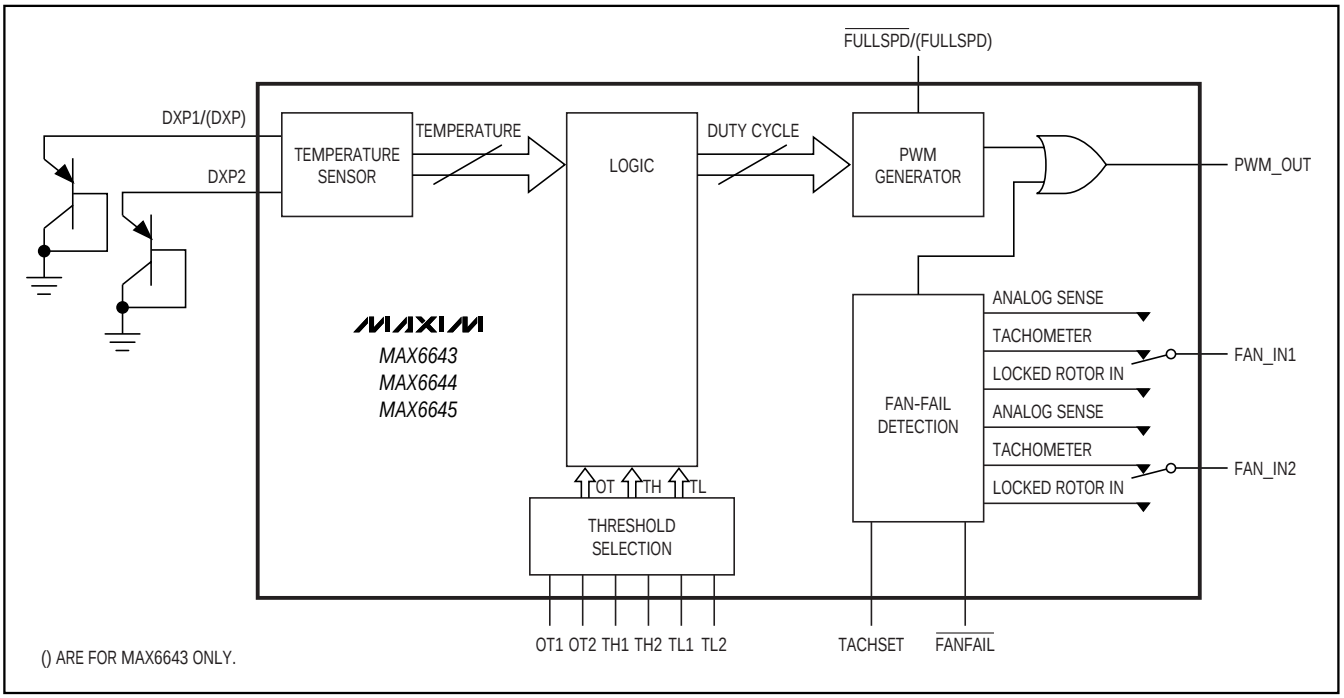

Typical Operating Circuit

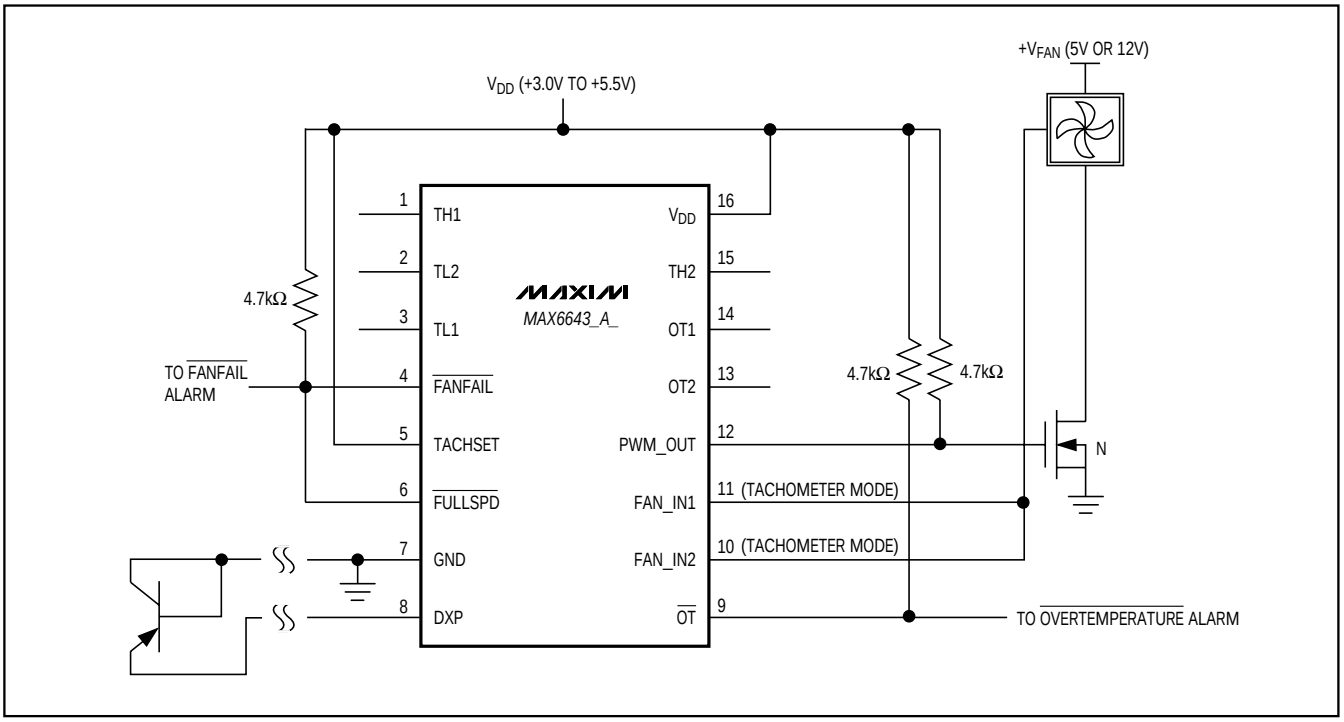

Automatic PWM Fan-Speed Controllers with Overtemperature Output

Package Information

(The package drawing(s) in this data sheet may not reflect the most current specifications. For the latest package outline information go to **www.maxim-ic.com/packages**.)

QSOP.EPS

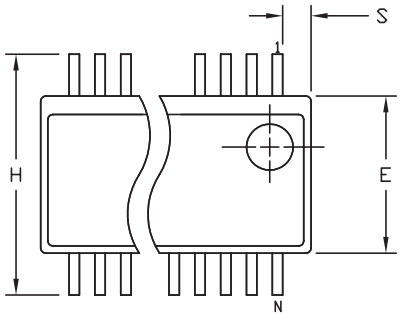

	INCHES		MILLIMETERS	
DIM	MIN	MAX	MIN	MAX
A	.061	.068	1.55	1.73
A1	.004	.0098	0.102	0.249
A2	.055	.061	1.40	1.55
B	.008	.012	0.20	0.30
C	.0075	.0098	0.191	0.249
D	SEE VARIATIONS			
E	.150	.157	3.81	3.99
e	.025 BSC		0.635 BSC	
H	.230	.244	5.84	6.20
h	.010	.016	0.25	0.41
L	.016	.035	0.41	0.89
N	SEE VARIATIONS			
α	0°	8°	0°	8°

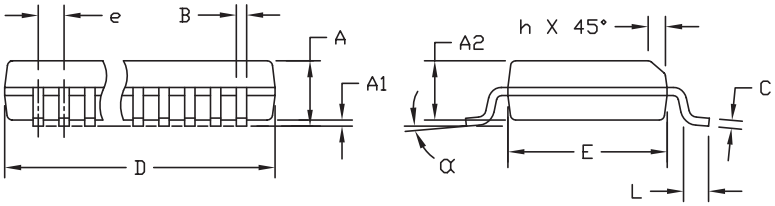

VARIATIONS:

	INCHES		MILLIMETERS			
	MIN.	MAX.	MIN.	MAX.	N	
D	.189	.196	4.80	4.98	16	AB
S	.0020	.0070	0.05	0.18		
D	.337	.344	8.56	8.74	20	AD
S	.0500	.0550	1.270	1.397		
D	.337	.344	8.56	8.74	24	AE
S	.0250	.0300	0.635	0.762		
D	.386	.393	9.80	9.98	28	AF
S	.0250	.0300	0.635	0.762		

NOTES:
1). D & E DO NOT INCLUDE MOLD FLASH OR PROTRUSIONS.
2). MOLD FLASH OR PROTRUSIONS NOT TO EXCEED .006" PER SIDE.
3). CONTROLLING DIMENSIONS: INCHES.
4). MEETS JEDEC MO137.

DALLAS SEMICONDUCTOR MAXIM
PROPRIETARY INFORMATION

TITLE:
PACKAGE OUTLINE, QSOP .150", .025" LEAD PITCH

APPROVAL	DOCUMENT CONTROL NO.	REV.	
	21-0055	E	1/1

Package Information (continued)

(The package drawing(s) in this data sheet may not reflect the most current specifications. For the latest package outline information go to **www.maxim-ic.com/packages**.)

10LUMAX.EPS

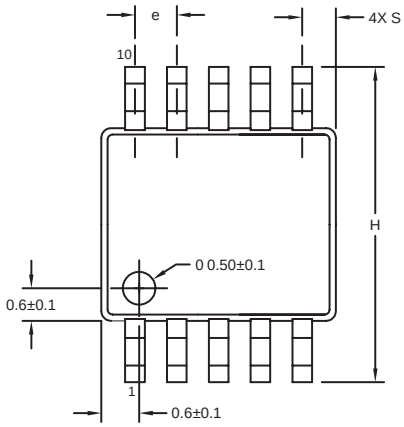

TOP VIEW

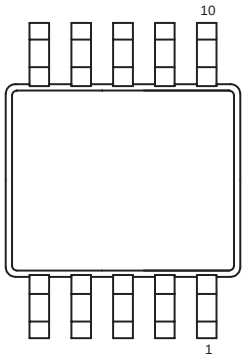

BOTTOM VIEW

	INCHES		MILLIMETERS	
DIM	MIN	MAX	MIN	MAX
A	-	0.043	-	1.10
A1	0.002	0.006	0.05	0.15
A2	0.030	0.037	0.75	0.95
D1	0.116	0.120	2.95	3.05
D2	0.114	0.118	2.89	3.00
E1	0.116	0.120	2.95	3.05
E2	0.114	0.118	2.89	3.00
H	0.187	0.199	4.75	5.05
L	0.0157	0.0275	0.40	0.70
L1	0.037 REF		0.940 REF	
b	0.007	0.0106	0.177	0.270
e	0.0197 BSC		0.500 BSC	
c	0.0035	0.0078	0.090	0.200
S	0.0196 REF		0.498 REF	
α	0°	6°	0°	6°

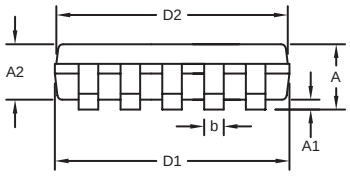

FRONT VIEW

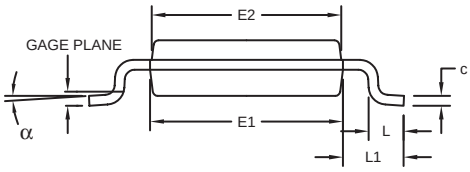

SIDE VIEW

NOTES:
1. D&E DO NOT INCLUDE MOLD FLASH.
2. MOLD FLASH OR PROTRUSIONS NOT TO EXCEED 0.15mm (.006").
3. CONTROLLING DIMENSION: MILLIMETERS.
4. MEETS JEDEC MO-187C-BA.

DALLAS SEMICONDUCTOR MAXIM

PROPRIETARY INFORMATION

TITLE: PACKAGE OUTLINE, 10L uMAX/uSOP

APPROVAL	DOCUMENT CONTROL NO.	REV.	
	21-0061	I	1/1

Maxim cannot assume responsibility for use of any circuitry other than circuitry entirely embodied in a Maxim product. No circuit patent licenses are implied. Maxim reserves the right to change the circuitry and specifications without notice at any time.

© 2004 Maxim Integrated Products Printed USA MAXIM is a registered trademark of Maxim Integrated Products.