THIS DRAWING IS UNPUBLISHED. RELEASED FOR PUBLICATION -,- .
© COPYRIGHT - By - ALL RIGHTS RESERVED.

LOC	DIST
CM	00

REVISIONS

P	LTR	DESCRIPTION	DATE	DWN	APVD
	AB4	REVISED PER ECO-11-020968	18OCT11	JR	SM

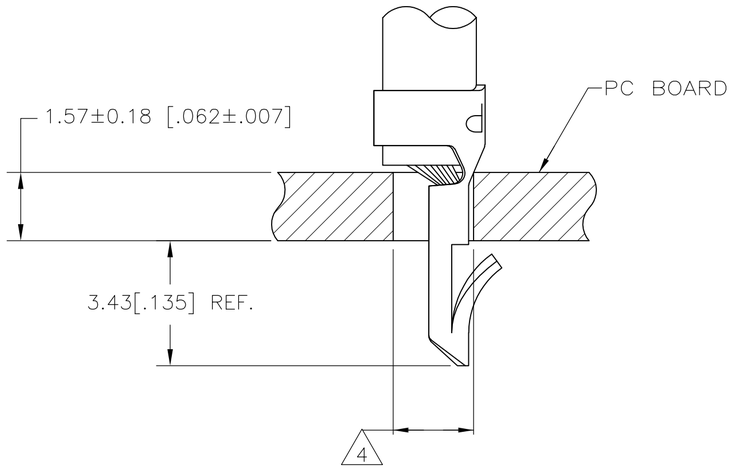

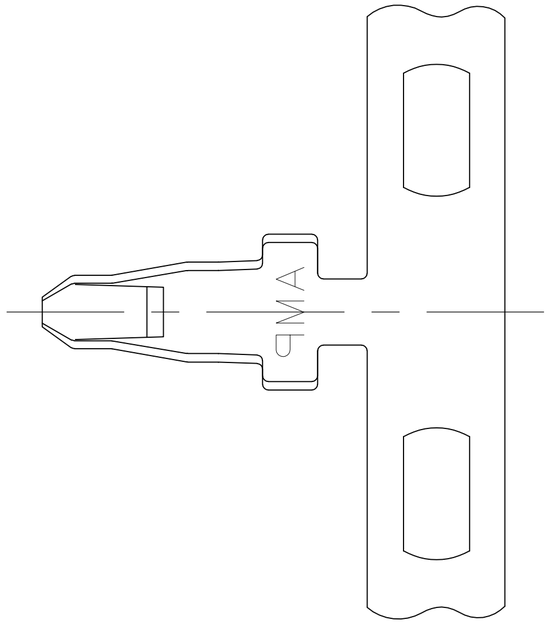

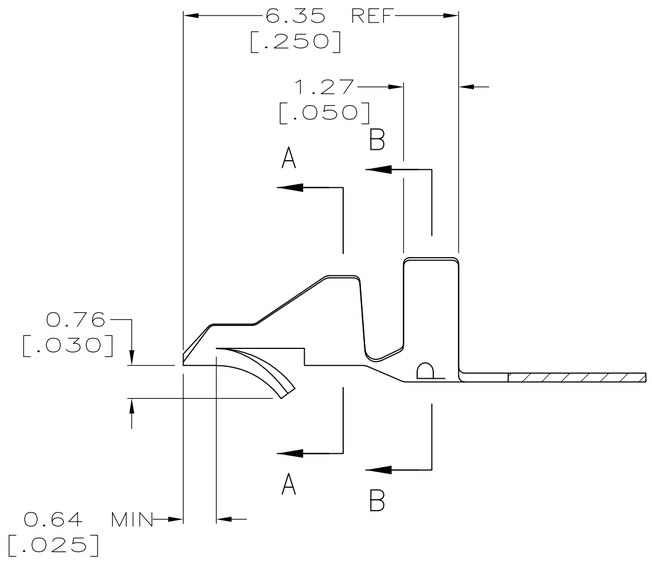

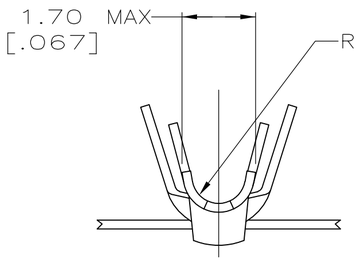

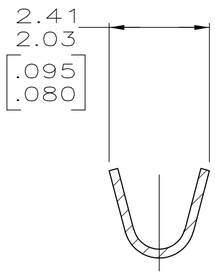

SECTION A–A

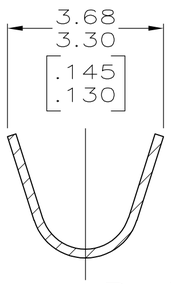

SECTION B–B

1. PARTS COMPLY WITH AMP SOLDERABILITY SPEC 109-11-3.
2. PARTS COMPLY WITH AMP SOLDERABILITY SPEC 109-11-5.
3. PARTS COMPLY WITH AMP SOLDERABILITY SPEC 109-11-1.
4. HOLE DIAMETER TO BE 1.83±0.08 FOR WIRE 0.3-0.6mm2 (20-22 AWG) OR 1.96±0.08 FOR WIRE 0.8-0.9mm2 (18 AWG).
5. CARRIER STRIP TO HAVE 1.52 [.060] DIA PILOT HOLE.
6. 0.00508 [.000200] MIN BRIGHT TIN-LEAD.
7. 0.00318 [.000150] MIN MATTE TIN-LEAD OVER 0.00305 [.000120] MIN MATTE COPPER.
8. 0.00305 [.000120] MIN TIN OVER 0.00102 [.000040] MIN NICKEL.
9. WIRE RANGE: 0.3 -0.9 mm^2 (22 - 18 AWG).
10. INSULATION RANGE: 1.52 - 2.79 [.060 - .110] DIA.
11. DIMENSIONS IN BRACKETS ARE IN INCHES.
12. 0.00508 [.000200] MIN BRIGHT TIN.

NOTES	FINISH	MATERIAL	PART NO.
1	12	0.20[.008] PH BRZ	3-350566-1
3 5	8	0.20[.008] BRASS	350566-7
3	8	0.20[.008] BRASS	350566-5
2	8	0.20[.008] BRASS	350566-3
1	6	0.20[.008] PH BRZ	350566-1

THIS DRAWING IS A CONTROLLED DOCUMENT.

DIMENSIONS: INCHES

TOLERANCES UNLESS OTHERWISE SPECIFIED:
0 PLC ±
1 PLC ±
2 PLC ±
3 PLC ± 0.13 [.005]
4 PLC ±
ANGLES ±

MATERIAL: SEE TABLE
FINISH: SEE TABLE

METRIC

DWN S. CARPENTER 20AUG2003
CHK J. ELLIS 20AUG2003
APVD J. ELLIS 20AUG2003
PRODUCT SPEC
APPLICATION SPEC 114-1016
WEIGHT

TE Connectivity

NAME
–
MINI AMP-IN (TM)

SIZE	CAGE CODE	DRAWING NO	RESTRICTED TO
A2	00779	C-350566	–

CUSTOMER DRAWING | SCALE 10:1 | SHEET 1 OF 1 | REV AB4

350566

1471-9 (3/11)