DRAWING MADE IN THIRD ANGLE PROJECTION

THIS DRAWING IS UNPUBLISHED. RELEASED FOR PUBLICATION ,19 .

© COPYRIGHT 19 BY AMP INCORPORATED. ALL INTERNATIONAL RIGHTS RESERVED.

MOD	LOC	STAT
18	BD	39

REVISIONS				
ZONE	LTR	DESCRIPTION	DATE	APPD
	G	REDRAWN	8/12/91	–

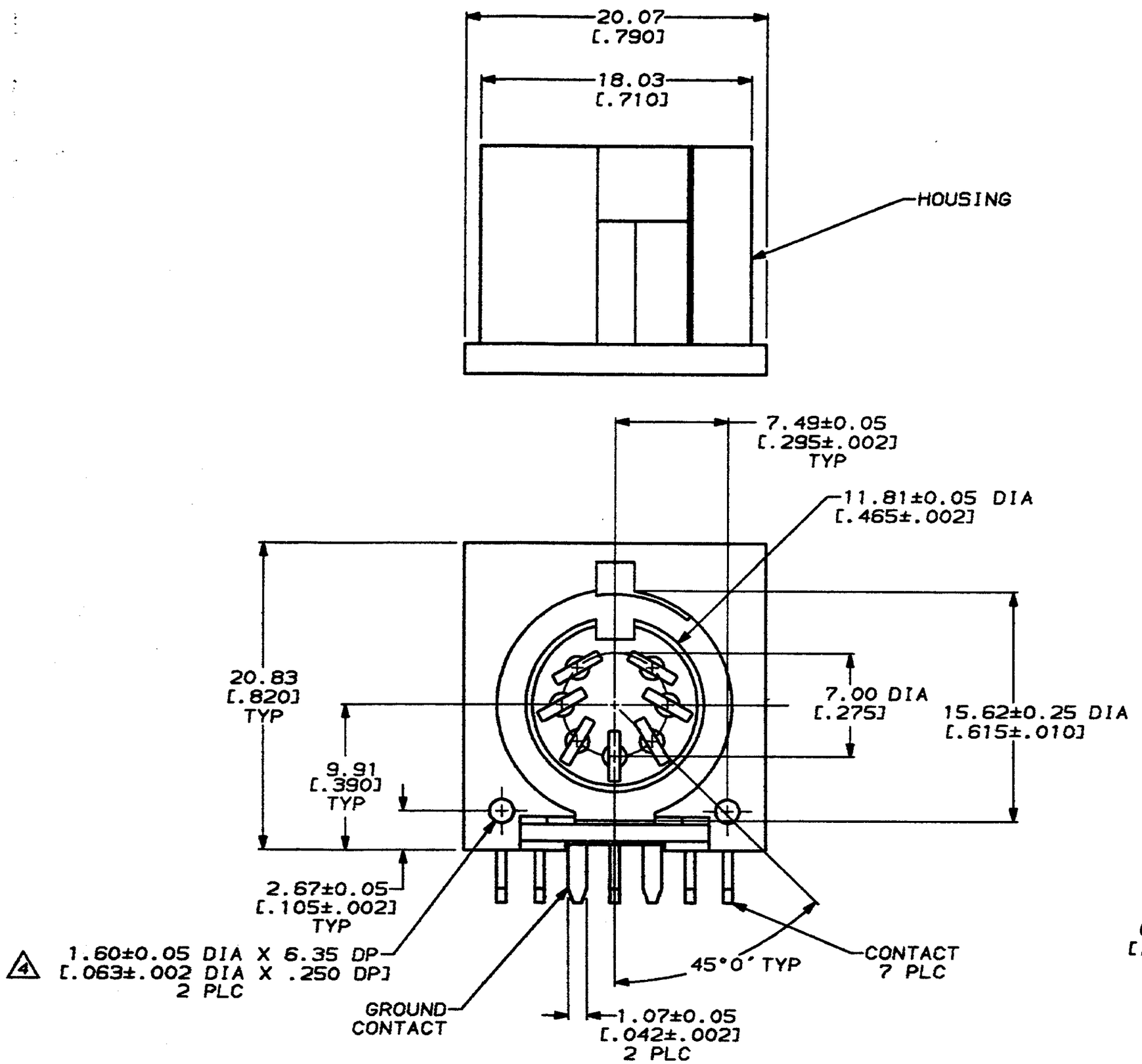

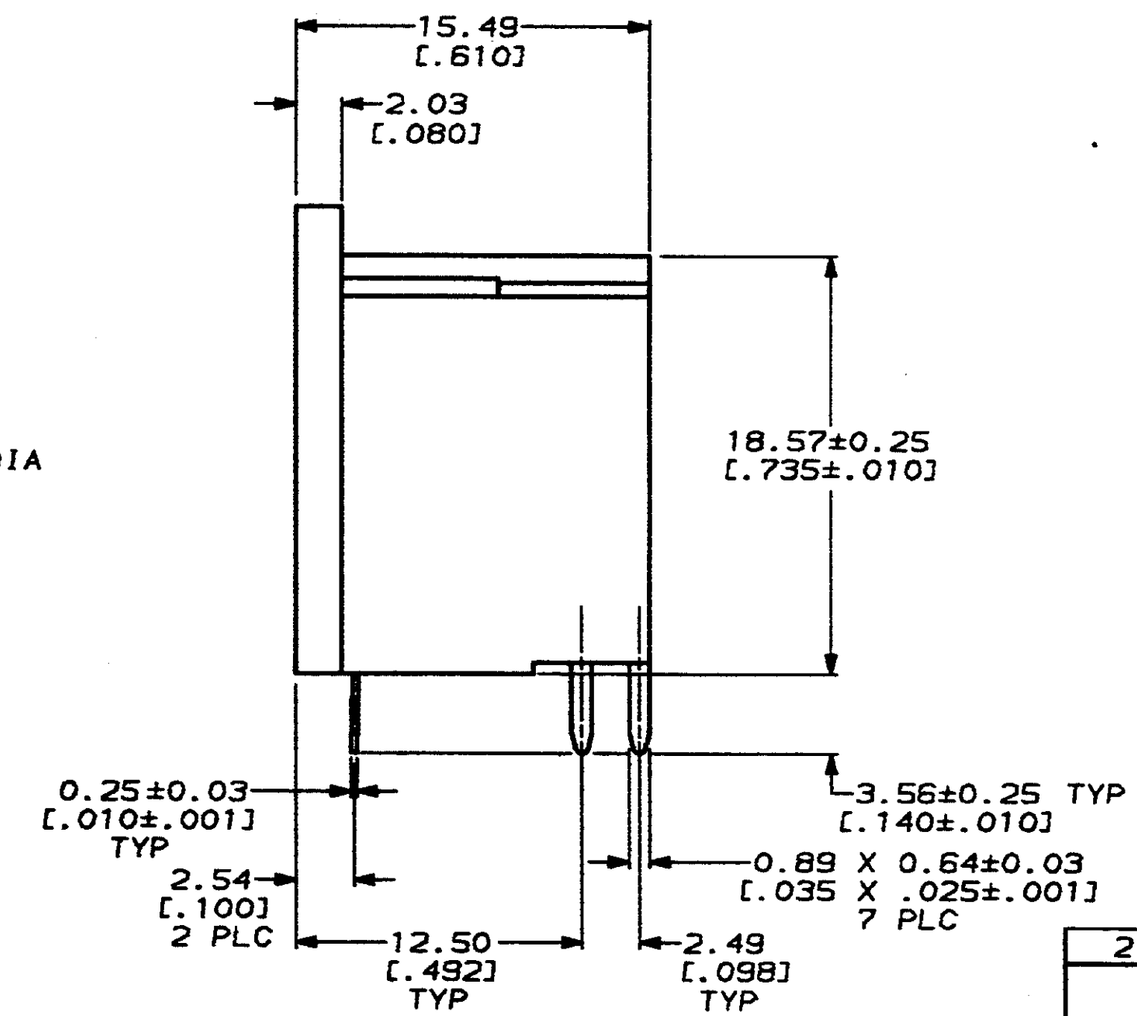

211510-1

PART NUMBER

1. NYLON, UL 94V-0 RATED, BLACK.
2. 2.54μm [.000100] MIN TIN-LEAD OVER 1.27μm [.000050] MIN NICKEL.
3. TIN PLATING PER MIL-T-10727, NICKEL PLATING PER QQ-N-290.
4. ACCEPTS #2 SELF-TAPPING SCREW, .250 LONG REF.
5. MATES WITH 7 POSITION SHIELDED DIN PLUG 212437-5.
6. BRASS PER ASTM B36.

DO NOT SCALE PRINT.
UNLESS SPECIFIED
DIMENSIONS IN mm[INCHES]
TOLERANCES ON :
2 PLC DEC ±0.13[.005]
3 PLC DEC ± –
ANGLES ± 0°30'

MATERIAL
HOUSING: 1
CONTACTS: 6
GROUND CONTACT: 6

FINISH
FINISH: 3
CONTACTS: 2
GROUND CONTACT: 2

DR 8/12/91 A.STAUB BG
CHK – J. Millisto 11-22-91
APPD – D.L. Rocker 11/22/91
APPD – C. Rohde 11-22-91

PRODUCT SPEC 108-10047

APPLICATION SPEC 114-40025

WEIGHT –

AMP Incorporated
Harrisburg, PA 17105-3608

NAME
RECEPTACLE ASSY, RIGHT ANGLE, 7 POSITION, CIRCULAR DIN

SIZE	CAGE CODE	DRAWING NO
C	00779	211510
SCALE 4:1		SHEET 1 OF 1

CUSTOMER DRAWING