MICRO SWITCH
a Honeywell Division
FED. MFG. CODE 91929

# SWITCH-TOGGLE

CATALOG LISTING
## 12TW29 SERIES CHART 1

THIS DRAWING COVERS A PROPRIETARY ITEM AND IS THE PROPERTY OF MICRO SWITCH. A DIVISION OF HONEYWELL. THIS DRAWING IS NOT TO BE COPIED OR USED WITHOUT THE APPROVAL OF MICRO SWITCH

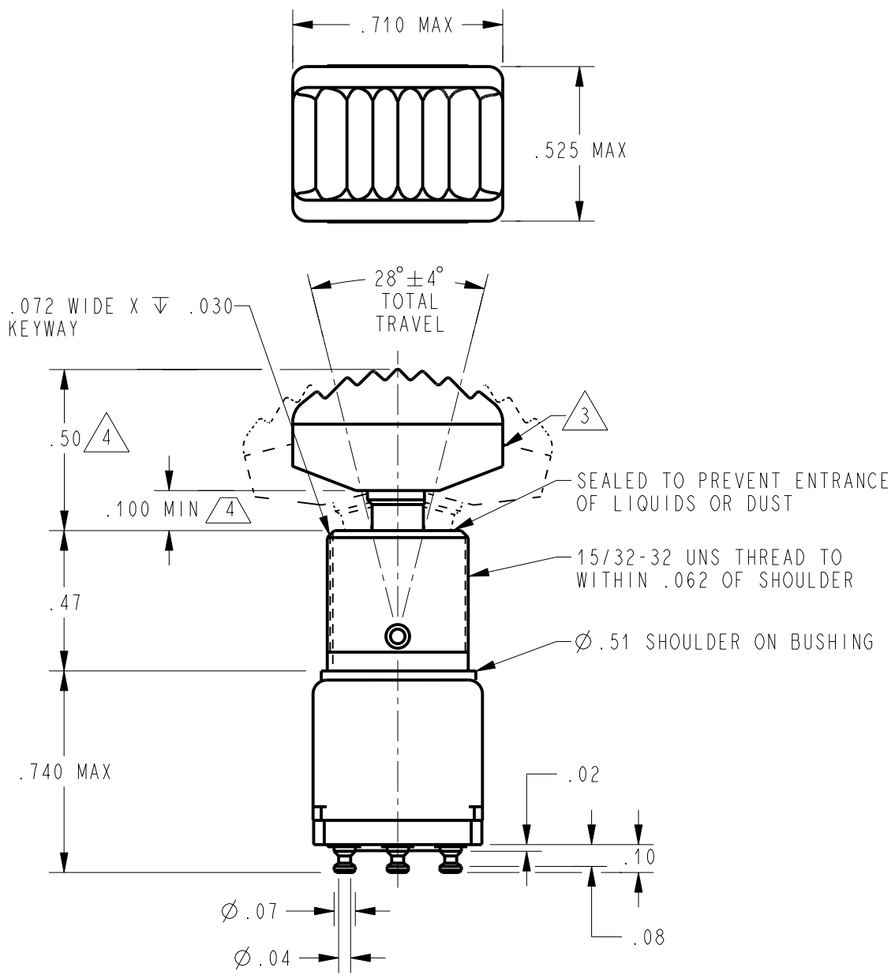


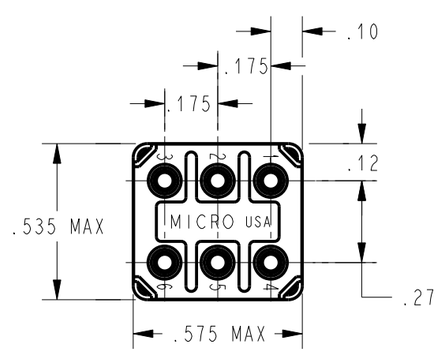


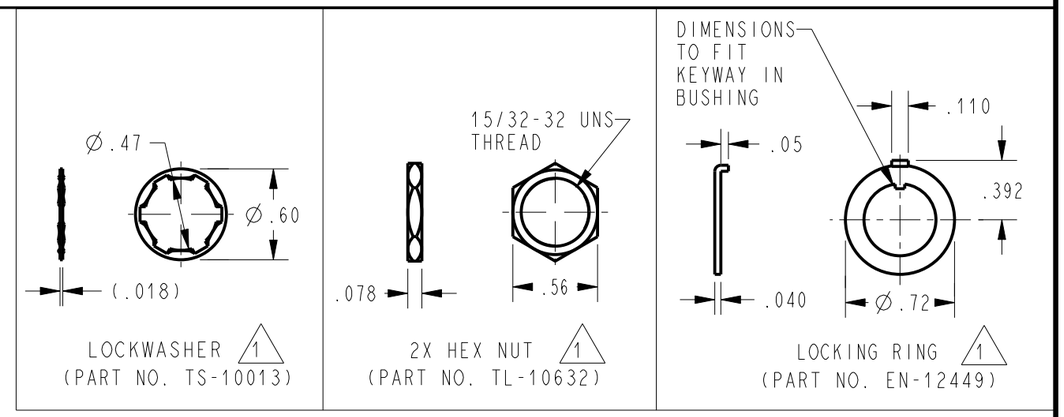


| CATALOG LISTING | ONE EXTREME POSITION (KEYWAY) 2-1 5-4 | CENTER POSITION | OTHER EXTREME POSITION (OPPOSITE KEYWAY) 2-3 5-6 |
|---|---|---|---|
| 12TW29-1 | ON | OFF | ON |
| 12TW29-2 | OFF | NONE | ON |
| 12TW29-3 | ON | NONE | ON |
| 12TW29-7 | MOM ON | OFF | MOM ON |
| 12TW29-8 | MOM ON | NONE | ON |

L117
5A 125 VAC

NOTES
1. FURNISHED UNASSEMBLED
2. TERMINALS ARE PLATED FOR SOLDERING
3. DULL BLACK FINISHED
4. DIMENSIONS APPLY AFTER MOUNTING. TORQUE SET SCREW 8-9 IN-LBS

THIRD ANGLE PROJECTION

SCALE 2 : 1

DO NOT SCALE PRINT

UNLESS OTHERWISE SPECIFIED TOLERANCES ARE

| | | |
|---|---|---|
| ONE PLACE | (.0) | ±.030 |
| TWO PLACE | (.00) | ±.015 |
| THREE PLACE | (.000) | ±.005 |
| ANGLES | | ± |

WEIGHT .032 LB MAX

ANSI Y14.5M-1982 APPLIES

CATALOG LISTING 12TW29 SERIES CHART 1
PAGE 1 OF 1
ISSUE 8
REVISIONS
A 0001429 C S L 11 SEP 03
PTC/CAD 2D
DRAWN C S L 11 SEP 03
CHECK
SAV 11 SEP 03
CHECK
CHECK
RELEASE NO. CO-78465
REPLACES 12TW29 SERIES